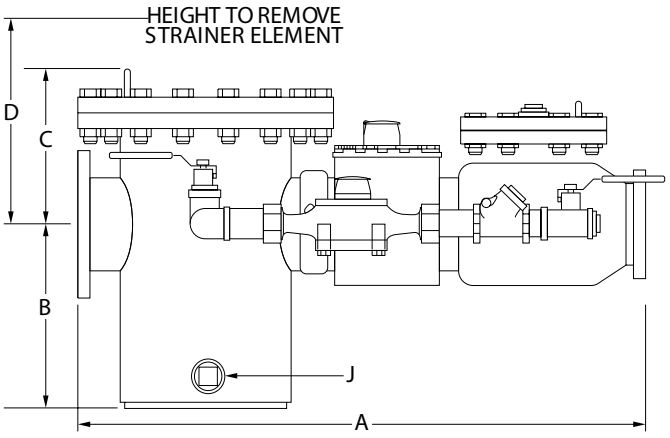

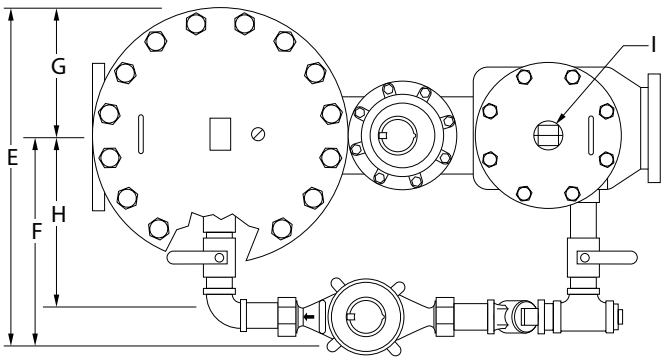

Operating Characteristics

Meter Size	Normal Operating Range* @100% Accuracy (±1.5%)	AWWA Standard	Low Flow @95% Accuracy	Maximum Intermittent Flow Rate
4"	3/4 to 1200 US gpm 0.171 to 272.55 m³/h	2 to 700 US gpm 0.45 to 159 m³/h	3/8 US gpm 0.09 m³/h	1500 US gpm 340.7 m³/h
6"	1 1/2 to 2500 US gpm 0.34 to 567.81 m³/h	4 to 1600 US gpm 0.91 to 363 m³/h	3/4 US gpm 0.17 m³/h	3100 US gpm 704.1 m³/h
8"	2 to 4000 US gpm 0.45 to 908.5 m³/h	7 to 2800 US gpm 1.6 to 636 m³/h	1 US gpm 0.23 m³/h	5000 US gpm 1135.6 m³/h
10"	2 to 6500 US gpm 0.45 to 1476.31 m³/h	12 to 4400 US gpm 2.7 to 999 m³/h	1 US gpm 0.23 m³/h	8000 US gpm 1817 m³/h

Registration

Registration (per sweep hand revolution)		Disc Side 1"	Disc Side 1 1/2"	Disc Side 2"	Turbine Side 4"	Turbine Side 6"	Turbine Side 8" & 10"
1,000	US Gallons					●	●
100	Gallons		●	●	●		
100	Cubic Feet					●	●
10	US Gallons	●					
10	Cubic Feet		●	●	●		
1	Cubic Foot	●					
10	Cubic Metres					●	●
1	Cubic Metre			●	●		
0.1	Cubic Metre	●	●				

Register Capacity (6 active wheel odometer)		Disc Side 1"	Disc Side 1 1/2"	Disc Side 2"	Turbine Side 4"	Turbine Side 6"	Turbine Side 8" & 10"
1,000,000,000	Gallons					●	●
100,000,000	Gallons		●	●	●		
100,000,000	Cubic Feet					●	●
10,000,000	Gallons	●					
10,000,000	Cubic Feet		●	●	●		
10,000,000	Cubic Metres					●	●
1,000,000	Cubic Metres			●	●		
1,000,000	Cubic Feet	●					
100,000	Cubic Metres	●	●				

Dimensions

Meter Size	A in/mm	B in/mm	C in/mm	D in/mm	E in/mm	F in/mm	G in/mm	H in/mm	I in/mm	J in/mm	Weight lbs/kg
4Ó	33 838	10 254	10 3/4 273	17 1/2 445	22 559	15 1/4 387	6 3/4 171	12 305	2 51	2 51	215 98
6Ó	45 1143	11 1/16 281	11 3/8 289	21 1/4 540	29 737	19 1/2 495	9 1/2 241	16 406	2 51	3 76	570 258
8Ó	53 1346	11 13/16 300	13 29/64 342	25 7/8 657	34 1/4 870	21 3/4 552	12 1/2 318	17 432	3 76	3 76	765 347
10Ó	68 1727	14 13/16 376	15 381	30 1/16 764	36 1/4 921	22 1/2 572	13 3/4 349	18 457	3 76	3 76	900 408

Guarantee Systems Capability

All HP Protectus III Fire Service meters are guaranteed adaptable to our ARB®V, ProRead AutoDetect, TRICON®/S , TRICON/E3®, and Neptune meter reading systems without removing the meter from service.

Specifications

- Application: cold water measurement of flow in one direction
- Maximum operating pressure: 175 psi (1206 kPa)
- Register: direct reading, center sweep, roll-sealed magnetic drive with low-flow indicator
- Measuring element: AWWA Class II Turbine, hydrodynamically balanced rotor, nutating disc
- Flanges: round flanged ends per AWWA C207, Class D

Options

- Sizes: 4", 6", 8", and 10"
- Units of measure: U.S. gallons, imperial gallons, cubic feet, cubic metres
- Register types:
  - Direct reading: Bronze box and cover (standard)
  - Remote reading systems*: ARB, ProRead AutoDetect Absolute Encoder, TRICON/S, TRICON/E3
  - Reclaim
- Companion flanges:
  - Cast iron
  - Bronze (4" only)

* Consult factory for meter performance specifications when fitted with ARB.

DATE: 2-28-02
SCALE: N/A
DRAWN BY: JMS
CHECKED:
PROJ:

New Jersey's Largest Municipality
HAMILTON TOWNSHIP
MUNICIPAL UTILITIES AUTHORITY
ATLANTIC COUNTY
6024 KEN SCULL AVENUE
MAYS LANDING, NJ 08330

HTMUA DRAWING #3A

4",6",8" & 10" FIRE SERVICE METER
NEPTUNE TECHNOLOGY

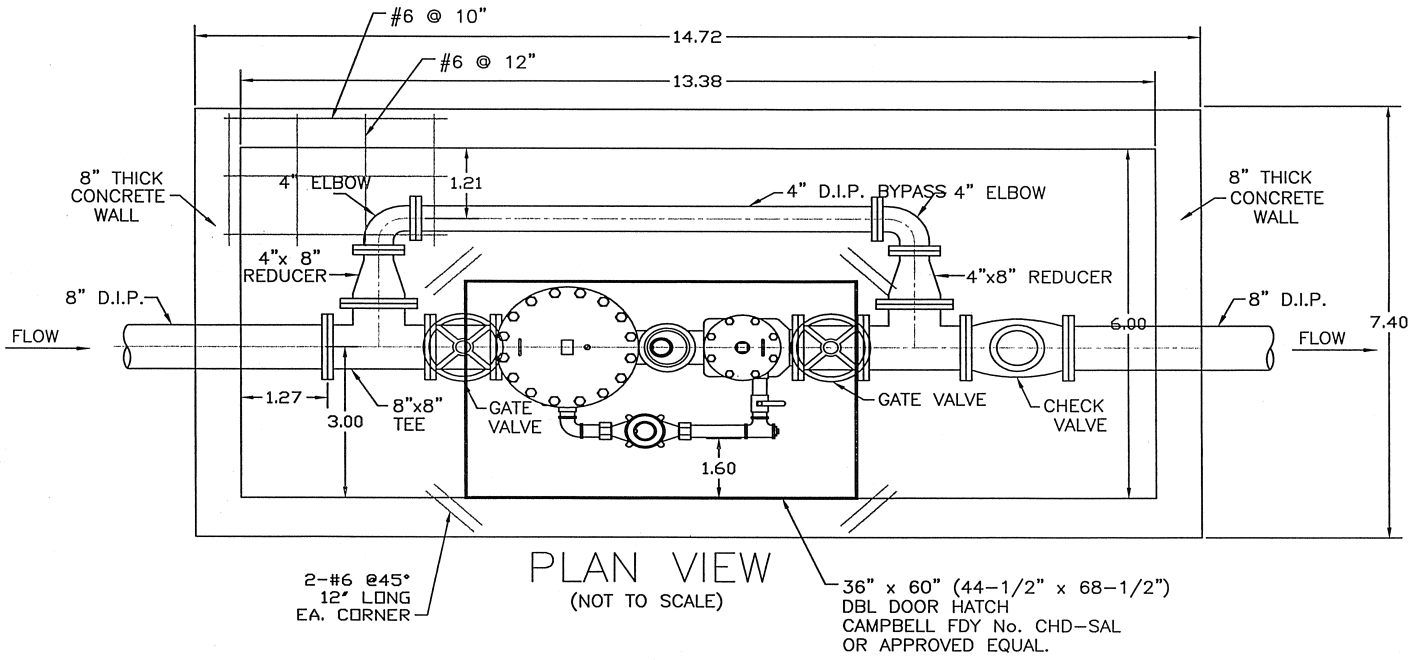

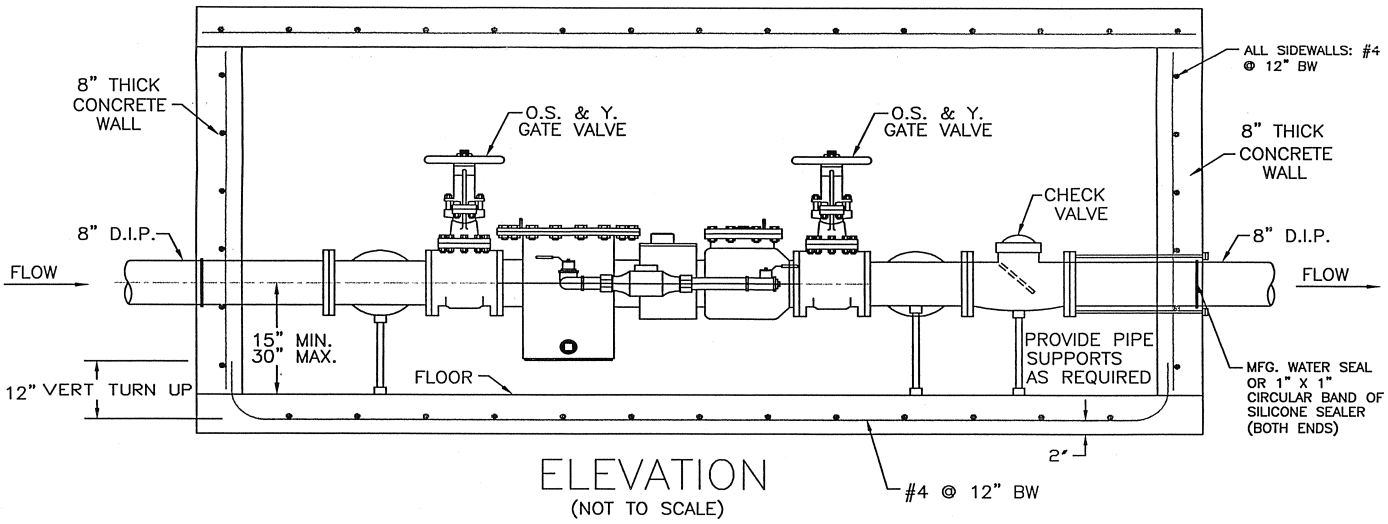

NOTES:

1. NEPTUNE 8" PROTECTUS UL/FM FIRE METER, OR EQUAL. ARBV 3BD GALLON WITH R-900 PIT RADIO TRANSMITTERS.
2. HEIGHT OF VALVE TO BE DETERMINED BASED ON DEPTH OF WATER MAIN. TOP OF VALVE SHALL BE 6-12 INCHES ABOVE SURROUNDING GRADE.
3. VALVE WHEEL SHALL ALLOW FOR THE INSTALLATION OF AN HTMUA SEAL TO VERIFY CLOSED OPERATION.
3. CONTRACTOR TO SUBMIT SHOP DRAWINGS FOR REVIEW AND APPROVAL.

DATE: 2-28-02
SCALE: N/A
DRAWN BY: JMS
CHECKED:
PROJ:

New Jersey's Largest Municipality
HAMILTON TOWNSHIP
MUNICIPAL UTILITIES AUTHORITY
ATLANTIC COUNTY
6024 KEN SCULL AVENUE
MAYS LANDING, NJ 08330

HTMUA DRAWING #3B

4",6",8" & 10" FIRE SERVICE METER NEPTUNE TECHNOLOGY

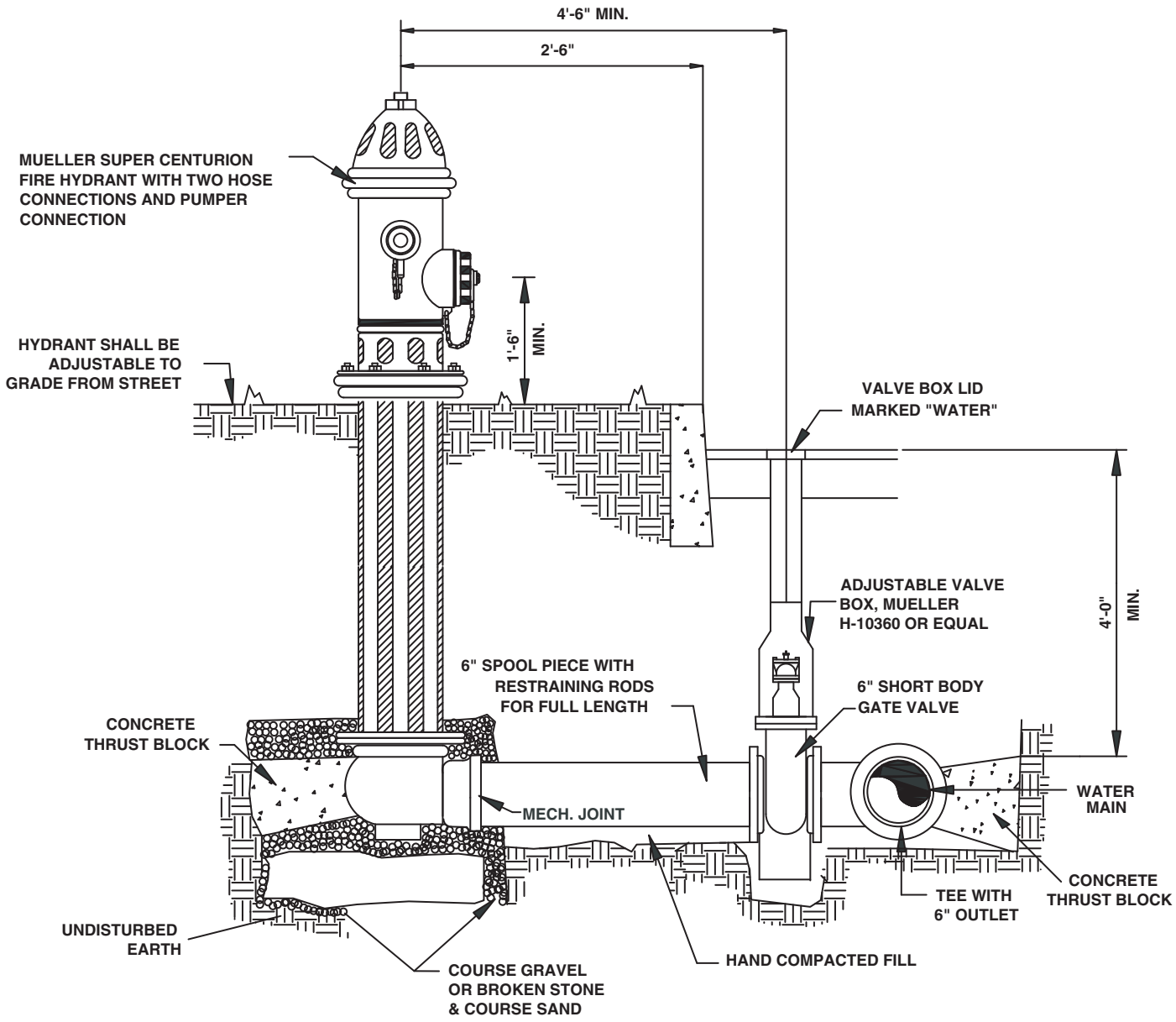

FIRE HYDRANT & VALVE DETAIL

N.T.S.

NOTE:
THREADS ON FIRE HYDRANT OUTLETS SHALL BE AMERICAN NATIONAL FIRE HOSE CONNECTION SCREW THREADS

DATE:	2-28-02
SCALE:	N/A
DRAWN BY:	JMS
CHECKED:	
PROJ:	

New Jersey's Largest Municipality
HAMILTON TOWNSHIP
MUNICIPAL UTILITIES AUTHORITY
ATLANTIC COUNTY
6024 KEN SCULL AVENUE
MAYS LANDING, NJ 08330

HTMUA DRAWING #4
FIRE HYDRANT CONNECTION

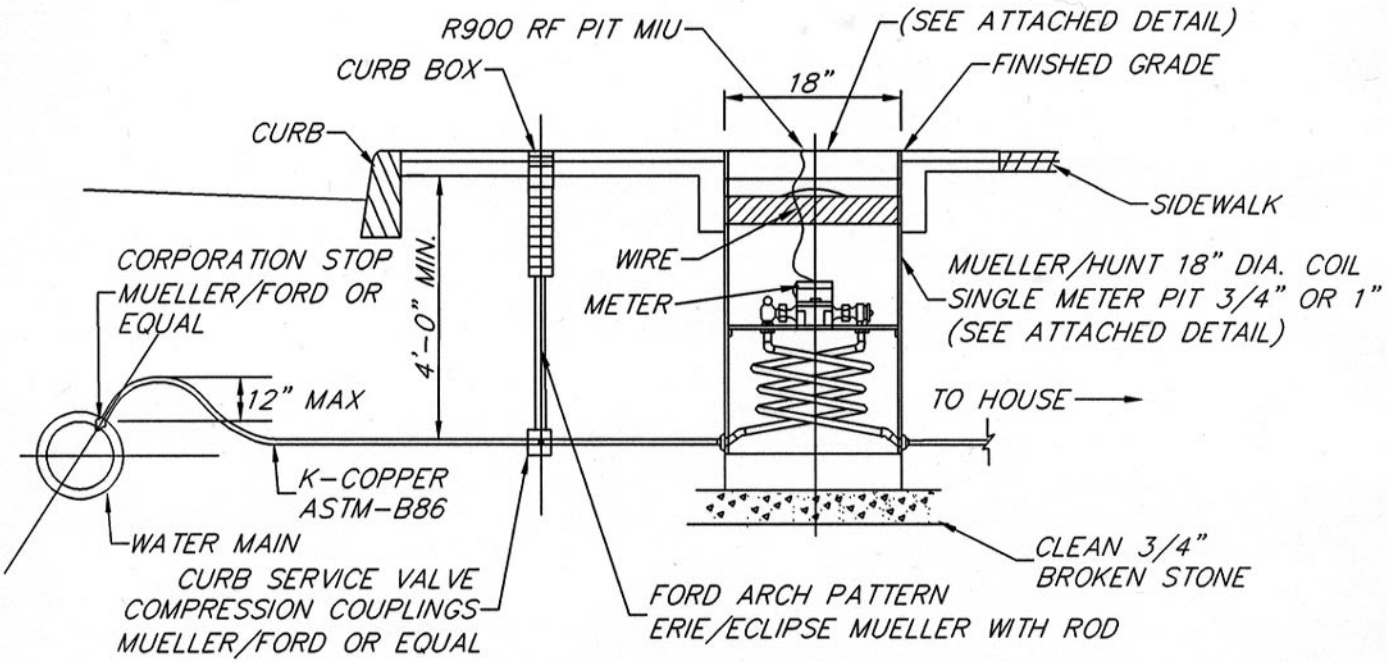

NOTES:
1. METER PIT AND CURB BOX SHALL BE INSTALLED IN A GRASS AREA BETWEEN THE CURB AND THE SIDEWALK.
2. METER SHALL BE SCHLUMBERGER PROREAD T-10E49W OR EQUAL.
3. METER SHALL BE FURNISHED WITH RF900 RF MIU AND WIRE. COST FOR THE R900 RF PIT MIU AND THE WIRE SHALL BE INCLUDED IN THE COST FOR THE METER.
4. METER PIT SHALL BE INSTALLED FLUSH WITH EXISTING GRADE.

METER PIT DETAIL

N.T.S.

3/4" TO 1" SERVICE

DATE:	2-28-02
SCALE:	N/A
DRAWN BY:	JMS
CHECKED:	
PROJ:	

New Jersey's Largest Municipality
HAMILTON TOWNSHIP
MUNICIPAL UTILITIES AUTHORITY
ATLANTIC COUNTY
6024 KEN SCULL AVENUE
MAYS LANDING, NJ 08330

HTMUA DRAWING #6
3/4" TO 1" SERVICE

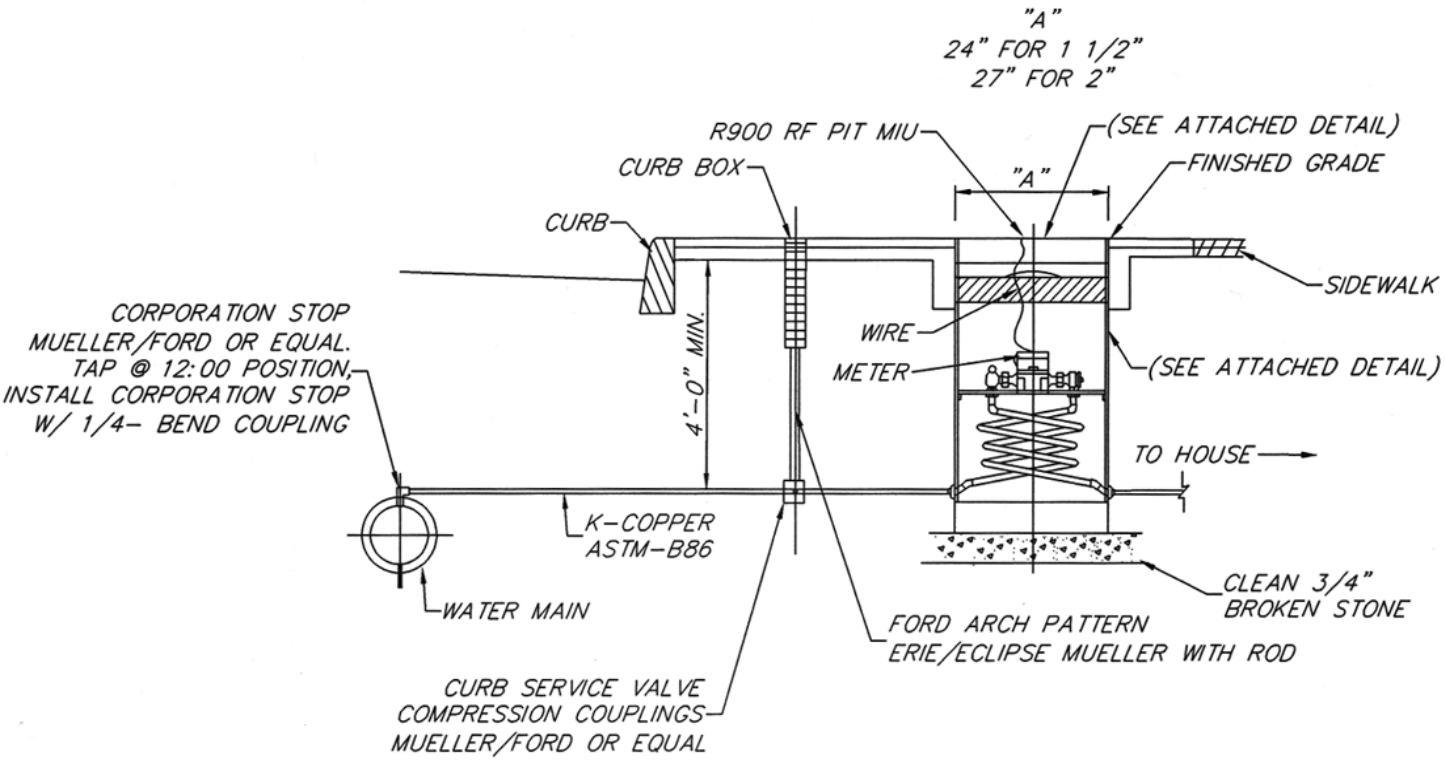

NOTES:
1. METER PIT SHALL BE INSTALLED IN A GRASS AREA CLOSE THE CURB.
2. METER SHALL BE SCHLUMBERGER PROREAD T-10E49W OR EQUAL.
3. METER SHALL BE FURNISHED WITH RF900 RF MIU AND WIRE. COST FOR THE R900 RF PIT MIU AND THE WIRE SHALL BE INCLUDED IN THE COST FOR THE METER.
4. METER PIT SHALL BE INSTALLED FLUSH WITH EXISTING GRADE.

METER PIT DETAIL

N.T.S.

1.5"-2" SERVICE

DATE:	2-28-02
SCALE:	N/A
DRAWN BY:	JMS
CHECKED:	
PROJ:	

New Jersey's Largest Municipality
HAMILTON TOWNSHIP
MUNICIPAL UTILITIES AUTHORITY
ATLANTIC COUNTY
6024 KEN SCULL AVENUE
MAYS LANDING, NJ 08330

HTMUA DRAWING #6

1.5"-2" SERVICE

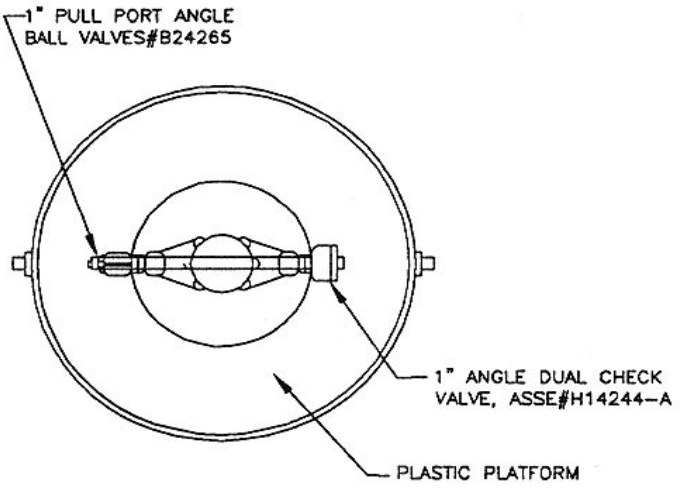

PLAN VIEW

NOTE:
METER NOT INCLUDED

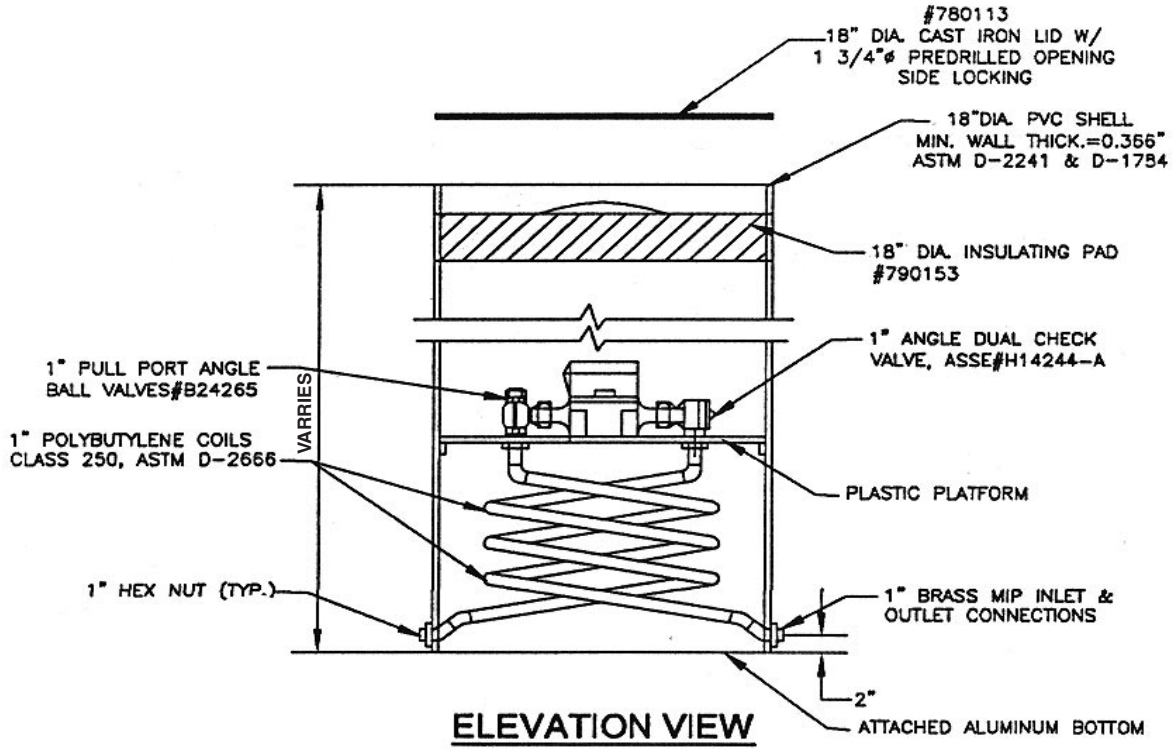

ELEVATION VIEW

NOTE: R900 WATER RF PIT MIV NOT SHOWN

MUELLER/ HUNT

18-INCH DIA. COIL SINGLE METER PIT FOR 1-INCH METER (#330CS1848FSAS)

DATE:	2-28-02
SCALE:	N/A
DRAWN BY:	JMS
CHECKED:	
PROJ:	

New Jersey's Largest Municipality
HAMILTON TOWNSHIP
MUNICIPAL UTILITIES AUTHORITY
ATLANTIC COUNTY
6024 KEN SCULL AVENUE
MAYS LANDING, NJ 08330

HTMUA DRAWING #6A
1-INCH METER

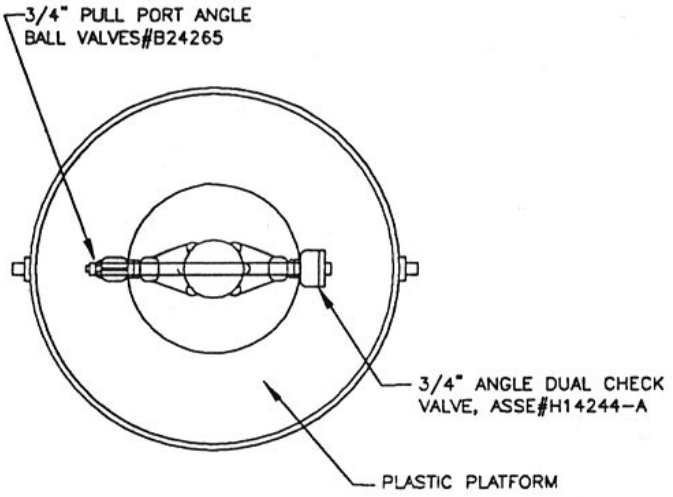

PLAN VIEW

NOTE:
METER NOT INCLUDED

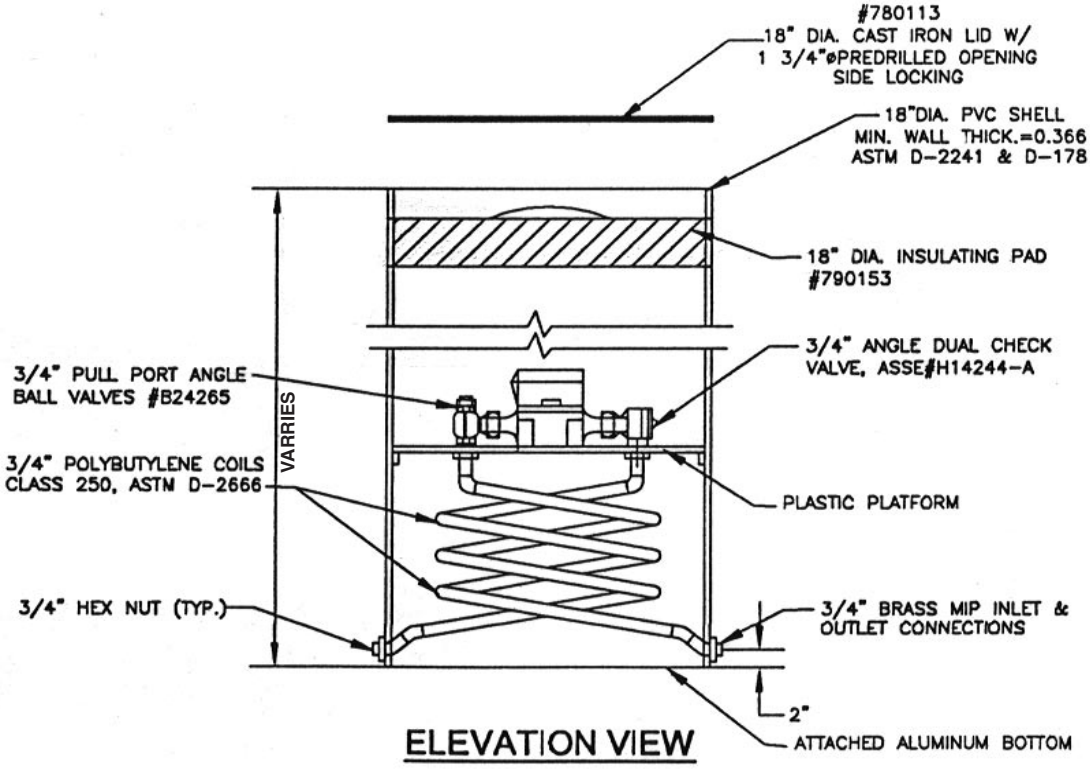

ELEVATION VIEW

NOTE: R900 WATER RF PIT MIV NOT SHOWN

MUELLER/ HUNT

18-INCH DIA. COIL SINGLE METER PIT FOR 3/4-INCH METER (#330CS1848FSAS)

DATE: 2-28-02
SCALE: N/A
DRAWN BY: JMS
CHECKED:
PROJ:

New Jersey's Largest Municipality
HAMILTON TOWNSHIP
MUNICIPAL UTILITIES AUTHORITY
ATLANTIC COUNTY
6024 KEN SCULL AVENUE
MAYS LANDING, NJ 08330

HTMUA DRAWING #6B

3/4-INCH METER

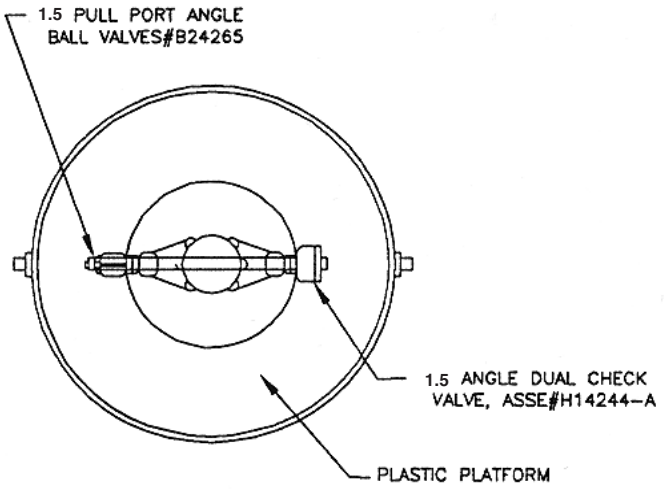

PLAN VIEW

NOTE:
METER NOT INCLUDED

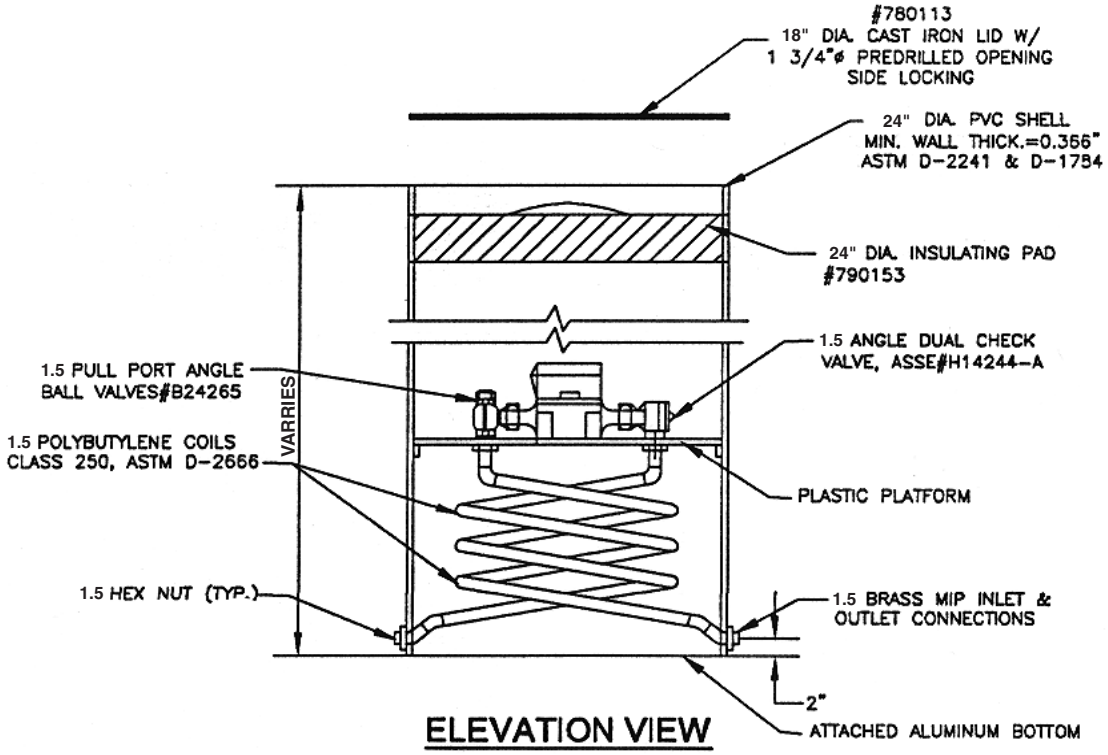

ELEVATION VIEW

NOTE: R900 WATER RF PIT MIV NOT SHOWN

MUELLER/ HUNT

24-INCH DIA. COIL SINGLE METER PIT FOR 1.5-INCH METER

DATE:	2-28-02
SCALE:	N/A
DRAWN BY:	JMS
CHECKED:	
PROJ:	

New Jersey's Largest Municipality
HAMILTON TOWNSHIP
MUNICIPAL UTILITIES AUTHORITY
ATLANTIC COUNTY
6024 KEN SCULL AVENUE
MAYS LANDING, NJ 08330

HTMUA DRAWING #6C

1.5-INCH METER

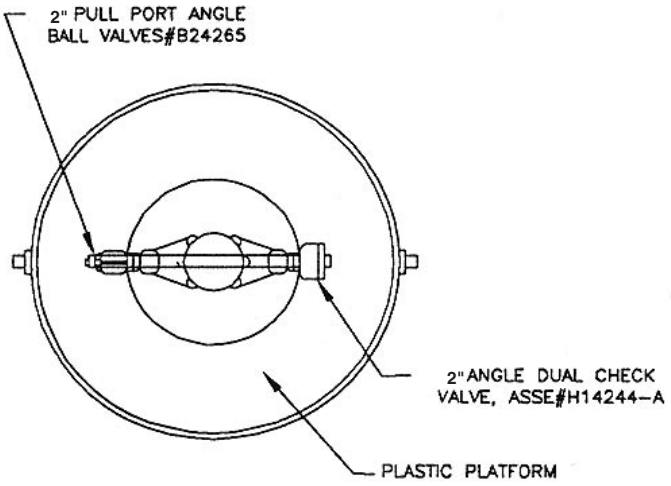

PLAN VIEW

NOTE:
METER NOT INCLUDED

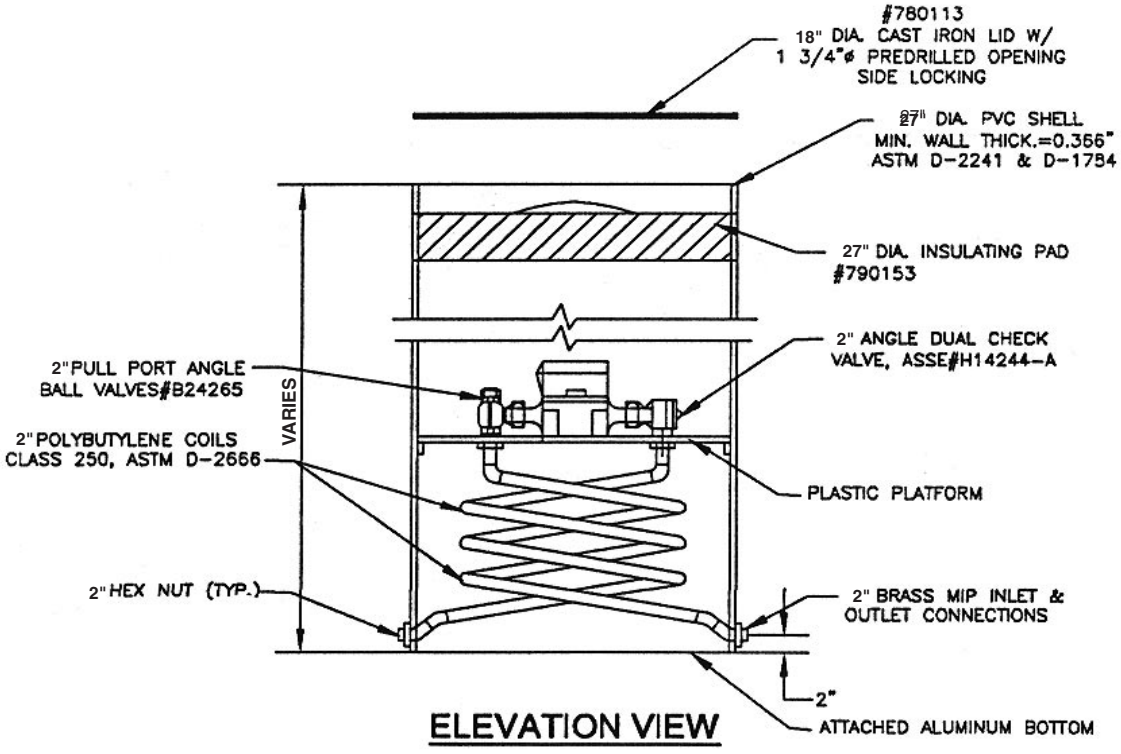

ELEVATION VIEW

NOTE: R900 WATER RF PIT MIV NOT SHOWN

MUELLER/ HUNT

27-INCH DIA. COIL SINGLE METER PIT FOR 2-INCH METER

DATE:	2-28-02
SCALE:	N/A
DRAWN BY:	JMS
CHECKED:	
PROJ:	

New Jersey's Largest Municipality
HAMILTON TOWNSHIP
MUNICIPAL UTILITIES AUTHORITY
ATLANTIC COUNTY
6024 KEN SCULL AVENUE
MAYS LANDING, NJ 08330

HTMUA DRAWING #6D
2-INCH METER

Operating Characteristics

Meter Size	Normal Operating Range @100% Accuracy (±1.5%)	AWWA Standard	Low Flow @ 95% Accuracy
5/8"	1/2 to 20 US gpm 0.11 to 4.55 m³/h	1 to 20 US gpm 0.23 to 4.5 m³/h	1/8 US gpm 0.03 m³/h
3/4"	3/4 to 30 US gpm 0.17 to 6.82 m³/h	2 to 30 US gpm 0.45 to 6.8 m³/h	1/4 US gpm 0.06 m³/h
1"	1 to 50 US gpm 0.23 to 11.36 m³/h	3 to 50 US gpm 0.68 to 11.4 m³/h	3/8 US gpm 0.09 m³/h

Specifications

- Certification: ANSI/NSF 61
- Application: cold water measurement of flow in one direction
- Maximum operating pressure: 150 psi (1034 kPa)
- Maximum operating temperature: 80°F
- Measuring chamber: nutating disc technology design made from proprietary synthetic polymer

Registration

Registration (per sweep hand revolution)		5/8"	3/4" & 1"
10	US Gallons	●	●
10	Imperial Gallons	●	●
1	Cubic Foot	●	●
0.1	Cubic Metre	●	●
0.01	Cubic Metre	●	

Register Capacity (6-wheel odometer)		5/8"	3/4" & 1"
10,000,000	US Gallons	●	●
10,000,000	Imperial Gallons	●	●
1,000,000	Cubic Feet	●	●
100,000	Cubic Metres	●	●
10,000	Cubic Metres	●	

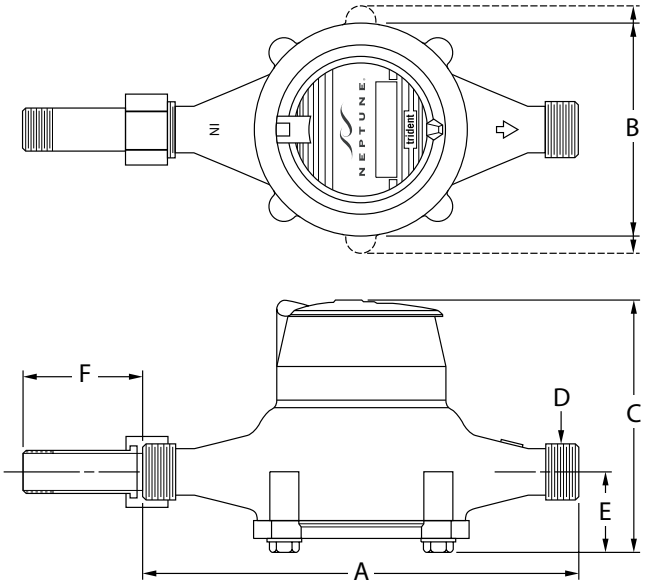

Dimensions

Meter Size	A in/mm	B in/mm	C-Std. in/mm	C-ARB in/mm	D-Threads per inch	D-OD in/mm	E in/mm	F in/mm	Weight lbs/kg
5/8"	7 1/2 191	3 5/8 92	4 7/8 124	5 3/8 137	14	1.030 26	1 5/8 41	2 1/2 64	3 3/4 1.7
5/8"x3/4"	7 1/2 191	3 5/8 92	4 7/8 124	5 3/8 137	11 1/2	1.290 33	1 5/8 41	2 5/8 67	4 1.8
3/4"	9 229	4 3/8 111	5 1/2 140	5 13/16 148	11 1/2	1.290 33	1 7/8 48	2 5/8 67	6 2.7
3/4"SL	7 1/2 911	4 3/8 111	5 1/2 140	5 13/16 148	11 1/2	1.290 33	1 7/8 48	2 5/8 67	5 1/2 2.5
3/4"x1"	9 229	4 3/8 111	5 1/2 140	5 13/16 148	11 1/2	1.626 41	1 7/8 48	2 3/4 70	6 1/2 2.9
1"	10 3/4 273	6 1/2 165	6 3/8 162	6 5/8 168	11 1/2	1.626 41	2 1/8 54	2 3/4 70	9 3/4 4.4
1"x1 1/4"	10 3/4 273	6 1/2 165	6 3/8 162	6 5/8 168	11 1/2	1.865 47	2 1/8 54	2 13/16 71	10 1/4 4.6

Options

- Sizes:
  - 5/8", 5/8" x 3/4"
  - 3/4", 3/4" SL, 3/4" x 1"
  - 1", 1" x 1 1/4"
- Units of measure: U.S. gallons, imperial gallons, cubic feet, cubic metres
- Register types:
  - Direct reading: Bronze box and cover (standard)
  - Remote reading: ProRead AutoDetect Absolute Encoder, TRICON/S, TRICON/E3
  - Reclaim
- Bottom caps:
  - Synthetic polymer (5/8" only)
  - Cast iron
  - EnviroBrass II, ductile iron
- Connections: EnviroBrass II, straight or bent

Guaranteed Systems Compatibility

All T-10 water meters are guaranteed adaptable to our ARB®V, ProRead AutoDetect, TRICON®/S, TRICON/E3®, and Neptune meter reading systems without removing the meter from service.

DATE: 2-28-02
SCALE: N/A
DRAWN BY: JMS
CHECKED:
PROJ:

New Jersey's Largest Municipality
HAMILTON TOWNSHIP
MUNICIPAL UTILITIES AUTHORITY
ATLANTIC COUNTY
6024 KEN SCULL AVENUE
MAYS LANDING, NJ 08330

HTMUA DRAWING #6E

5/8"- 3/4"-1" T-10 WATER METER
NEPTUNE TECHNOLOGY

Operating Characteristics

Meter Size	Normal Operating Range @100% Accuracy (±1.5%)	AWWA Standard	Low Flow @ 95% Accuracy
1 1/2"	2 to 100 US gpm 0.46 to 22.73 m³/h	5 to 100 US gpm 1.1 to 22.7 m ³/h	3/4 US gpm 0.17 m ³/h
2"	2 1/2 to 160 US gpm 0.57 to 36.36 m³/h	8 to 160 US gpm 1.8 to 36.3 m ³/h	1 US gpm 0.23 m ³/h

Guaranteed Systems Compatibility

All T-10 meters are guaranteed adaptable to our ARB ® V, ProRead AutoDetect, TRICON ® /S, TRICON/E3 ®, and Neptune meter reading systems without removing the meter from service.

Options

• Sizes:
-1 12" flanged or threaded end
- 2" flanged or threaded end
E Units of measure: U.S. gallons, imperial gallons, cubic feet, cubic metres
• Register types:
- Direct reading: Bronze box and cover (standard)
- Remote reading: ProRead AutoDetect Absolute Encoder, TRICON/S, TRICON/E3
-Reclaim
EMeasuring chamber: synthetic polymer
• Companion flanges: cast iron or EnviroBrass II

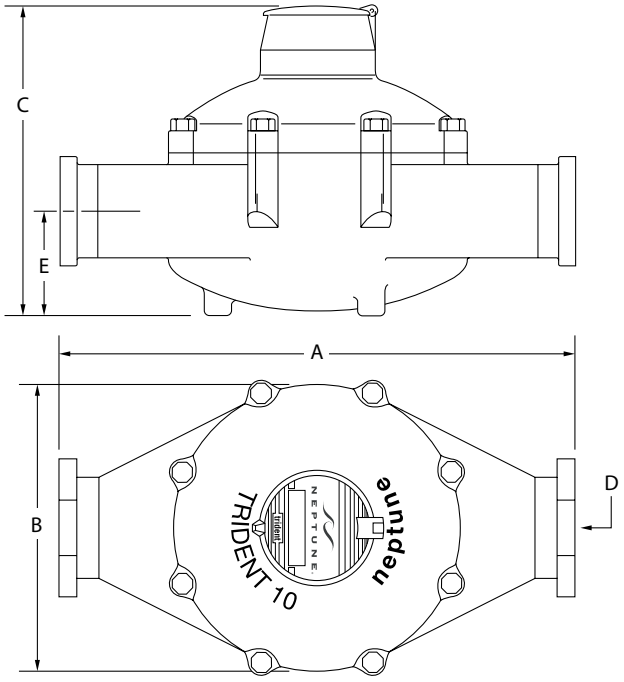

Registration

Registration (per sweep hand revolution)	1 1/2"	2"
100 US Gallons	●	●
100 Imperial Gallons	●	●
10 Cubic Feet	●	●
1 Cubic Metre		●
0.1 Cubic Metre	●	

Register Capacity (6-wheel odometer)	1 1/2"	2"
100,000,000 US Gallons	●	●
100,000,000 Imperial Gallons	●	●
10,000,000 Cubic Feet	●	●
1,000,000 Cubic Metres		●
100,000 Cubic Metres	●	

Dimensions

Meter Size	A in/mm	B in/mm	C-Std. in/mm	C-ARB in/mm	D-Threads per inch	D-Thread Type	E in/mm	Weight lbs/kg
1 1/2"	12 5/8	8 1/16	8 1/8	8 9/16	11 1/2	1 1/2"	2 9/16	31
Screw End	321	205	206	217		NPT	65	14.1
1 1/2"	13	8 1/16	8 1/8	8 9/16		2	9/16	35
Flanged End	330	205	206	217			65	15.9
2"	15 1/4	9 7/16	9 5/16	9 3/4	11 1/2	2"	3 1/8	40
Screw End	387	240	237	248		NPT	79	18.1
2"	17	9 7/16	9 5/16	9 3/4			3 1/8	44
Flanged End	432	240	237	248			79	20.0

Specifications

• Certification:ANSI/ NSF 61
• Application: cold water measurement of flow in one direction
•Maximum operating pressure: 150 psi (1034 kPa)
•Maximum operating temperature: 80°F
•Measuring chamber: nutating disc technology design made from proprietary synthetic polymer

DATE: 2-28-02
SCALE: N/A
DRAWN BY: JMS
CHECKED:
PROJ:

New Jersey's Largest Municipality
HAMILTON TOWNSHIP
MUNICIPAL UTILITIES AUTHORITY
ATLANTIC COUNTY
6024 KEN SCULL AVENUE
MAYS LANDING, NJ 08330

HTMUA DRAWING #6F

1.5" - 2" T-10 WATER METER
NEPTUNE TECHNOLOGY

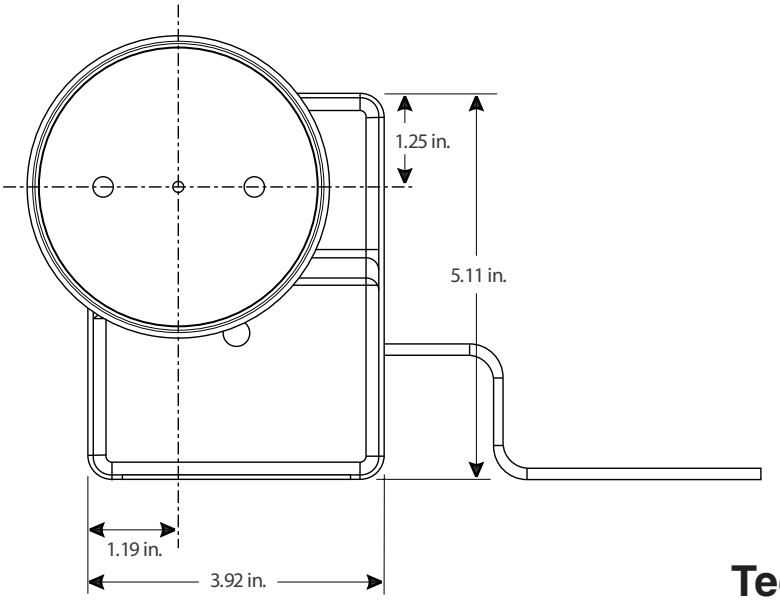

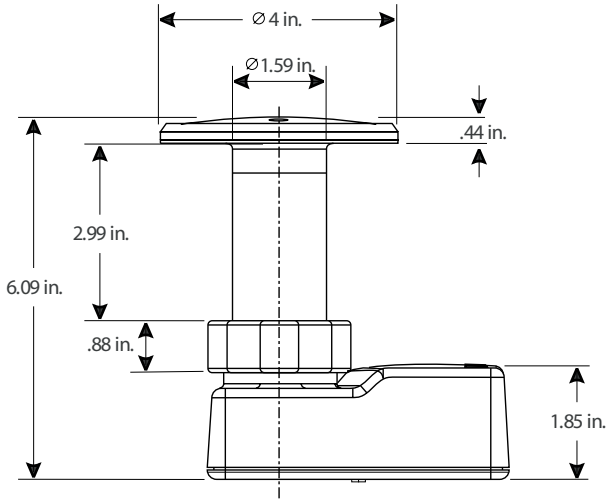

Technical Specifications

•Electrical Specifications:
- Power: Lithium battery
•Transmitter Specifications:
-Transmit Period: 4 seconds
-Transmitter Channels: 50
- Channel Frequency: 910 to 920 MHz spread spectrum
- Output Power: Meets FCC part 15.247
- FCC Verification: Part 15.247
•Encoder Register Interface:
-Two Available Wire Lengths:
6 feet and 25 feet
• Enviromental Conditions:
- Operating Temperature: -22º to 149ºF (-30º to 65ºC)
- Storage Temperature: -40º to 158ºF (-40º to 70ºC)
- Operating Humidity: 0 to 100%
• Functional Specifications:
- Register Reading
-MIU ID

NEPTUNE TECHNOLOGY

R900 PIT MIU AND DRIVE-BY DATA COLLECTION SYSTEM

DATE:	2-28-02
SCALE:	N/A
DRAWN BY:	JMS
CHECKED:	
PROJ:	

New Jersey's Largest Municipality
HAMILTON TOWNSHIP
MUNICIPAL UTILITIES AUTHORITY
ATLANTIC COUNTY

6024 KEN SCULL AVENUE
MAYS LANDING, NJ 08330

HTMUA DRAWING #6G
R900 MIU DATA COLLECTOR

Mueller/ McCullough
EZ-Vault Meter Setter

Mueller Co.
MAIN OFFICE—Decatur, IL (217) 423-4471
CANADA—Mueller Canada Inc., Milton Ontario (416) 878-0541
A Grinnell® COMPANY

FEATURES

1. Rigid PVC Material.
2. Round Styles.
3. Setter anchored in place for stability.
4. Locking by-pass with stop.
5. Aluminum bottom.

24" for single 1-1/2" displacement meter (13" Length).

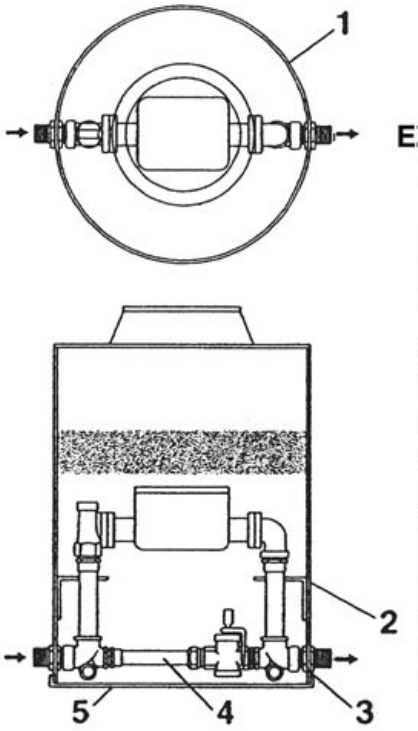

EZ-Vault Meter Setter

Tough, rigid .486" minimum PVC shell - thicker in larger diameter - white color reflects light and aids interior visibility.
Lightweight - can be handled by one man in most cases.
For 1-1/2" meters.
1-1/2" extra strength brass meter risers stabilized with PVC brackets.
Suitable for medium traffic areas.
Round Cast iron lid cannot fall in and dammage meter.
30" - 60" depths.
24" for 1-1/2" positive displacement with bypass.
Aluminum bottom - excludes debris.
Flanged angle meter stop inlet - with lockwing.
Flanged meter outlet fittings include angle meter stop with lockwing.
Locking bypass and stop.
Closed cell insulating pad.
Fully assembled and tested for 150 psi working pressure.

DATE:	2-28-02
SCALE:	N/A
DRAWN BY:	JMS
CHECKED:	
PROJ:	

HTMUA
New Jersey's Largest Municipality
HAMILTON TOWNSHIP
MUNICIPAL UTILITIES AUTHORITY
ATLANTIC COUNTY
6024 KEN SCULL AVENUE
MAYS LANDING, NJ 08330

HTMUA DRAWING #6H
1.5" METER SETTER

Mueller/ McCullough
EZ-Vault Meter Setter

Mueller Co.

MAIN OFFICE—Decatur, IL (217) 423-4471
CANADA—Mueller Canada Inc., Milton Ontario (416) 878-0541

A Grinnell® COMPANY

FEATURES

1. Rigid PVC Material.
2. Round Styles.
3. Setter anchored in place for stability.
4. Locking by-pass with stop.
5. Aluminum bottom.

27" for single 2" displacement meter (17" Length).

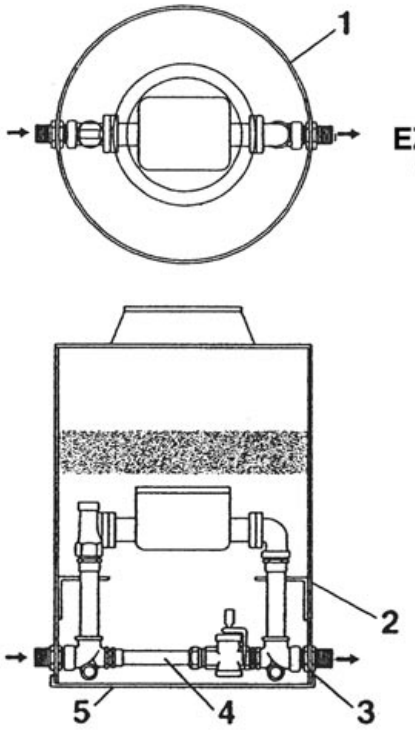

EZ-Vault Meter Setter

Tough, rigid .486" minimum PVC shell - thicker in larger diameter - white color reflects light and aids interior visibility.
Lightweight - can be handled by one man in most cases.
For 2" meters.
2" extra strength brass meter risers stabilized with PVC brackets.
Suitable for medium traffic areas.
Round Cast iron lid cannot fall in and dammage meter.
30" - 60" depths.
27" for 2" positive displacement with bypass.
Aluminum bottom - excludes debris.
Flanged angle meter stop inlet - with lockwing.
Flanged meter outlet fittings include angle meter stop with lockwing.
Locking bypass and stop.
Closed cell insulating pad.
Fully assembled and tested for 150 psi working pressure.

DATE:	2-28-02
SCALE:	N/A
DRAWN BY:	JMS
CHECKED:	
PROJ:	

HTMUA

New Jersey's Largest Municipality
HAMILTON TOWNSHIP
MUNICIPAL UTILITIES AUTHORITY
ATLANTIC COUNTY

6024 KEN SCULL AVENUE
MAYS LANDING, NJ 08330

HTMUA DRAWING #6I
2" METER SETTER

Mueller Co.

COPPER METER YOKE FOR 1-1/2" FLANGED METERS

1-1/2" Copper meter yokes with horizontal inlet and outlet and F.I.P. thread ends.

CATALOG NUMBER **H-1422**
DESCRIPTION WITH LOCK WING GROUND KEY ANGLE METER STOP

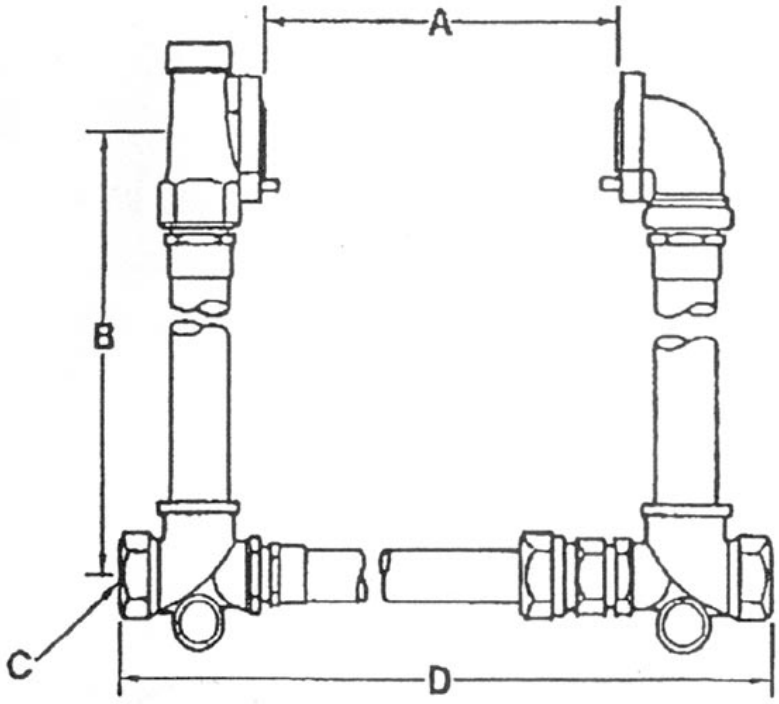

Meter Size	**1 1/2"**
Dimension A*	13.25"
Dimension B - riser height	12"
Dimension C - nominal pipe size inlet and outlet	1.5"
Dimension D*	21.50"

*Adjusable dimension. Copper tubing in the tie bar can be cut to accomodate shorter meters. Adjustment affects both A and D dimensions. See section six(6) for end conections that can be used with these yokes.

DATE: 2-28-02
SCALE: N/A
DRAWN BY: JMS
CHECKED:
PROJ:

New Jersey's Largest Municipality
HAMILTON TOWNSHIP
MUNICIPAL UTILITIES AUTHORITY
ATLANTIC COUNTY
6024 KEN SCULL AVENUE
MAYS LANDING, NJ 08330

HTMUA DRAWING #6J
1.5" METER YOKE

Mueller Co.

COPPER METER YOKE FOR 2" FLANGED METERS

2" Copper meter yokes with horizontal inlet and outlet and F.I.P. thread ends.

CATALOG NUMBER **H-1422**
DESCRIPTION WITH LOCK WING GROUND KEY ANGLE METER STOP

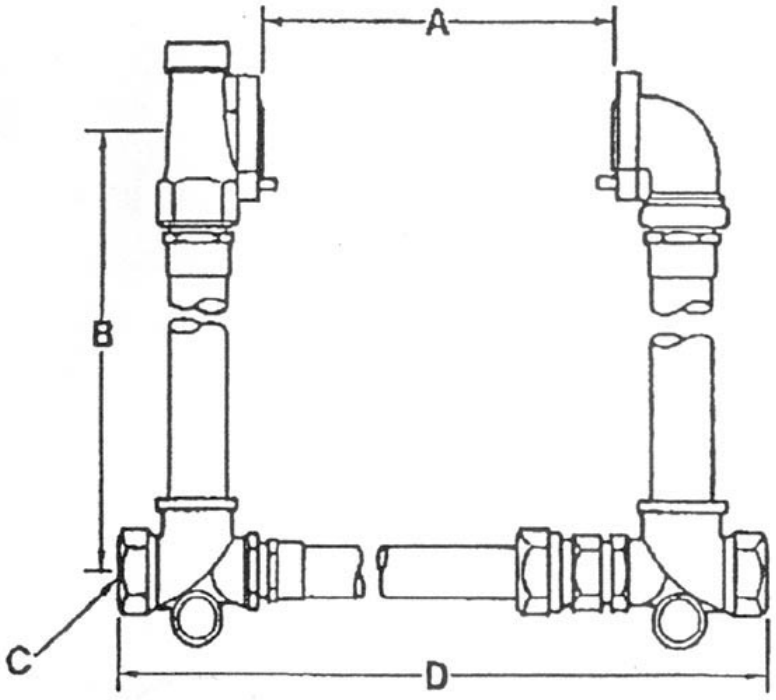

Meter Size	**2"**
Dimension A*	17.25"
Dimension B - riser height	12"
Dimension C - nominal pipe size inlet and outlet	2"
Dimension D*	26.63"

*Adjusable dimension. Copper tubing in the tie bar can be cut to accomodate shorter meters. Adjustment affects both A and D dimensions. See section six(6) for end conections that can be used with these yokes.

DATE: 2-28-02
SCALE: N/A
DRAWN BY: JMS
CHECKED:
PROJ:

New Jersey's Largest Municipality
HAMILTON TOWNSHIP
MUNICIPAL UTILITIES AUTHORITY
ATLANTIC COUNTY

6024 KEN SCULL AVENUE
MAYS LANDING, NJ 08330

HTMUA DRAWING #6K
2" METER YOKE

Mueller Co.

MAIN OFFICE—Decatur, IL (217) 423-4471
CANADA—Mueller Canada Inc., Milton Ontario (416) 878-0541

MUELLER / McCULLOUGH METER BOX SETTER LIDS

*LID FRAMES ARE USED WHEN BOXES ARE INSTALLED IN CONCRETE OR ASPHALT.

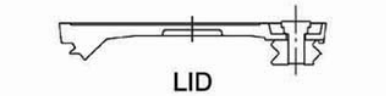

LID

LID FRAME

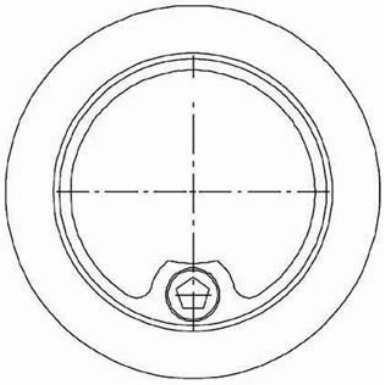

TOP VIEW

NOTE: THE FRAME ADDS 4" OF HEIGHT TO THE METER BOX.

*DRILL OPENING FOR RF900 MIV

FRAME PART NO.	LID SIZE OPENING	BOX DIA. FRAME FITS	LID PART NO.	LID SIZE
700098	18"	18",21",24" & 27"	282925	18"

DATE:	2-28-02
SCALE:	N/A
DRAWN BY:	JMS
CHECKED:	
PROJ:	

New Jersey's Largest Municipality

HAMILTON TOWNSHIP
MUNICIPAL UTILITIES AUTHORITY
ATLANTIC COUNTY

6024 KEN SCULL AVENUE
MAYS LANDING, NJ 08330

HTMUA DRAWING #6L

18" TO 27" METER BOX
SETTER LIDS

Mueller Co.

MAIN OFFICE—Decatur, IL (217) 423-4471
CANADA—Mueller Canada Inc., Milton Ontario (416) 878-0541

MUELLER / McCULLOUGH METER BOX SETTER LIDS

*LID FRAMES ARE USED WHEN BOXES ARE INSTALLED IN CONCRETE OR ASPHALT.

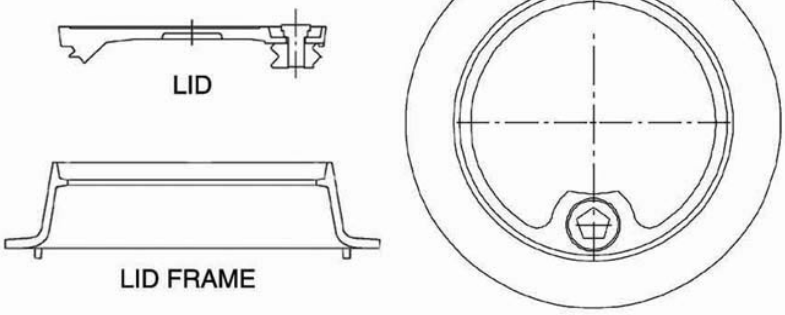

NOTE: THE FRAME ADDS 4" OF HEIGHT TO THE METER BOX.

*DRILL OPENING FOR RF900 MIV

FRAME PART NO.	LID SIZE OPENING	BOX DIA. FRAME FITS	LID PART NO.	LID SIZE
700098	18"	27"	282925	18"

DATE:	2-28-02
SCALE:	N/A
DRAWN BY:	JMS
CHECKED:	
PROJ:	

New Jersey's Largest Municipality
HAMILTON TOWNSHIP
MUNICIPAL UTILITIES AUTHORITY
ATLANTIC COUNTY

6024 KEN SCULL AVENUE
MAYS LANDING, NJ 08330

HTMUA DRAWING #6M

27" METER BOX SETTER LIDS

Mueller Co.

A Grinnell Company

CORPORATION STOPS AND VALVES WITH COPPER FLARE OUTLET

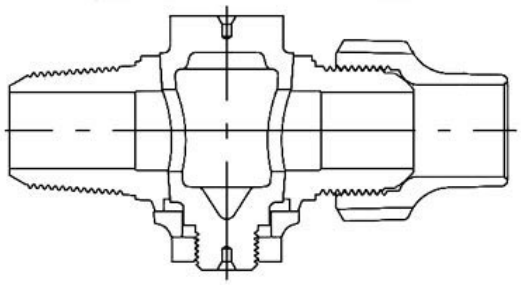

H-15000

Ground Key Corporation Stop
Inlet: AWWA taper (MUELLER "CC") thread
Outlet: Copper flare straight connection

1-1/2" - 5/ctn

SERVICE FITTINGS WITH COPPER FLARE CONNECTION

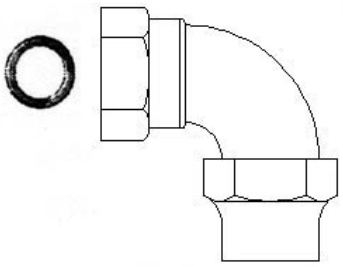

H-15068

Quarter bend coupling
Female copper flare thread X copper flare nut

1-1/2" - 7/ctn

DATE:	2-28-02
SCALE:	N/A
DRAWN BY:	JMS
CHECKED:	
PROJ:	

New Jersey's Largest Municipality
HAMILTON TOWNSHIP
MUNICIPAL UTILITIES AUTHORITY
ATLANTIC COUNTY

6024 KEN SCULL AVENUE
MAYS LANDING, NJ 08330

HTMUA DRAWING #6N
1.5" STOPS AND FITTINGS

Mueller Co.

A Grinnell Company

CORPORATION STOPS AND VALVES WITH COPPER FLARE OUTLET

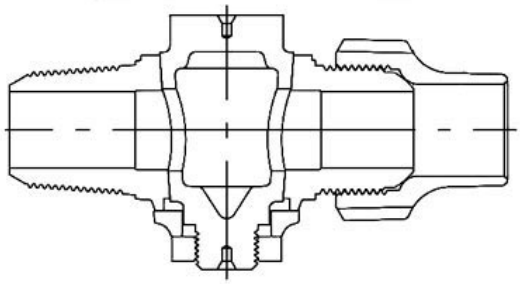

H-15000

Ground Key Corporation Stop
Inlet: AWWA taper (MUELLER "CC") thread
Outlet: Copper flare straight connection

2" - 2ctn

SERVICE FITTINGS WITH COPPER FLARE CONNECTION

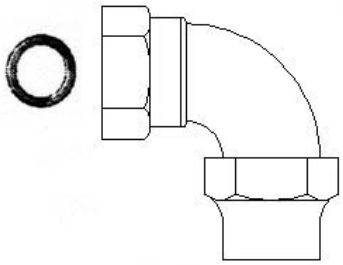

H-15068

Quarter bend coupling
Female copper flare thread X copper flare nut

2" - 3ctn

DATE:	2-28-02
SCALE:	N/A
DRAWN BY:	JMS
CHECKED:	
PROJ:	

New Jersey's Largest Municipality
HAMILTON TOWNSHIP
MUNICIPAL UTILITIES AUTHORITY
ATLANTIC COUNTY

6024 KEN SCULL AVENUE
MAYS LANDING, NJ 08330

HTMUA DRAWING #6O

2" STOPS AND FITTINGS

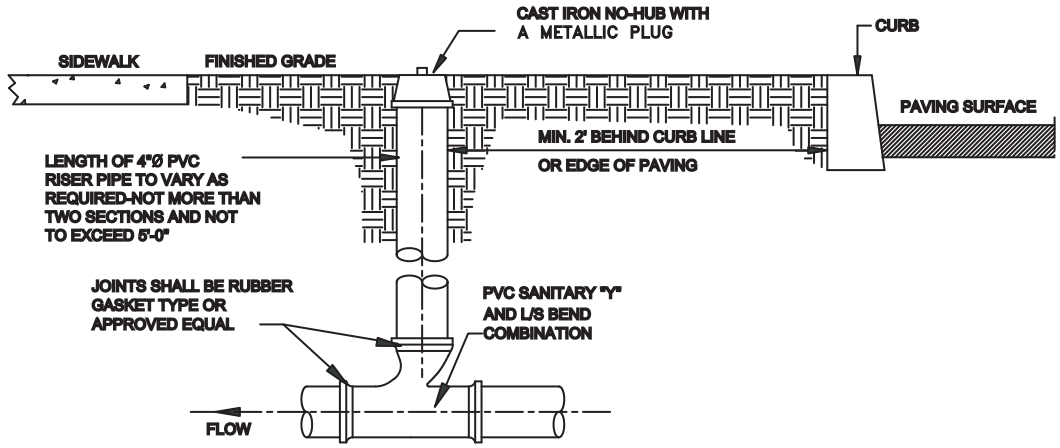

SECTION CLEANOUT

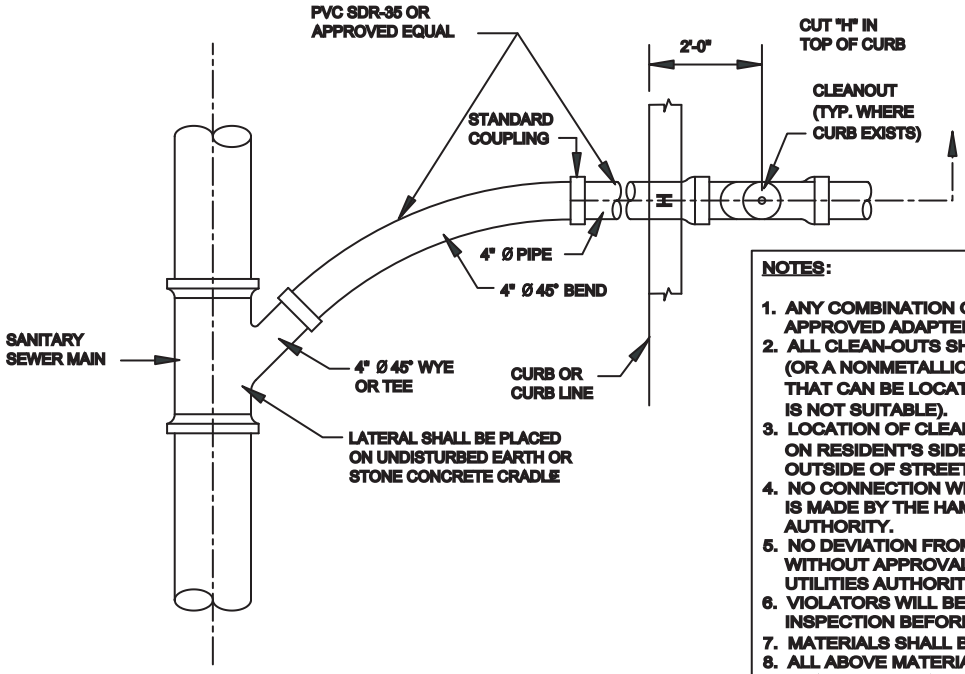

NOTES:

1. ANY COMBINATION OF 4" PIPE MUST BE CONNECTED BY APPROVED ADAPTER
2. ALL CLEAN-OUTS SHALL BE FITTED WITH A METALLIC CAP (OR A NONMETALLIC CAP FITTED WITH A METALLIC PLUG) THAT CAN BE LOCATED WITH A METAL DETECTOR (BRASS IS NOT SUITABLE).
3. LOCATION OF CLEANOUT TO BE IN PLANTER AREA OR 1 FOOT ON RESIDENT'S SIDE OF PROPOSED SIDEWALK AND NEVER OUTSIDE OF STREET R.O.W.
4. NO CONNECTION WILL BE BACKFILLED UNTIL WRITTEN APPROVAL IS MADE BY THE HAMILTON TOWNSHIP MUNICIPAL UTILITIES AUTHORITY.
5. NO DEVIATION FROM THESE SPECIFICATIONS SHALL BE MADE WITHOUT APPROVAL OF THE HAMILTON TOWNSHIP MUNICIPAL UTILITIES AUTHORITY.
6. VIOLATORS WILL BE REQUIRED TO EXPOSE THE WORK FOR INSPECTION BEFORE APPROVAL WILL BE GRANTED.
7. MATERIALS SHALL BE 4" Ø SDR-35 PVC PIPE.
8. ALL ABOVE MATERIALS MUST BE APPROVED BY HAMILTON TOWNSHIP M.U.A.

TYPICAL 4" HOUSE CONNECTION

N.T.S

DATE: 2-28-02
SCALE: N/A
DRAWN BY: JMS
CHECKED:
PROJ:

New Jersey's Largest Municipality
HAMILTON TOWNSHIP
MUNICIPAL UTILITIES AUTHORITY
ATLANTIC COUNTY

6024 KEN SCULL AVENUE
MAYS LANDING, NJ 08330

HTMUA DRAWING #8

4" HOUSE CONNECTION (SEWER)

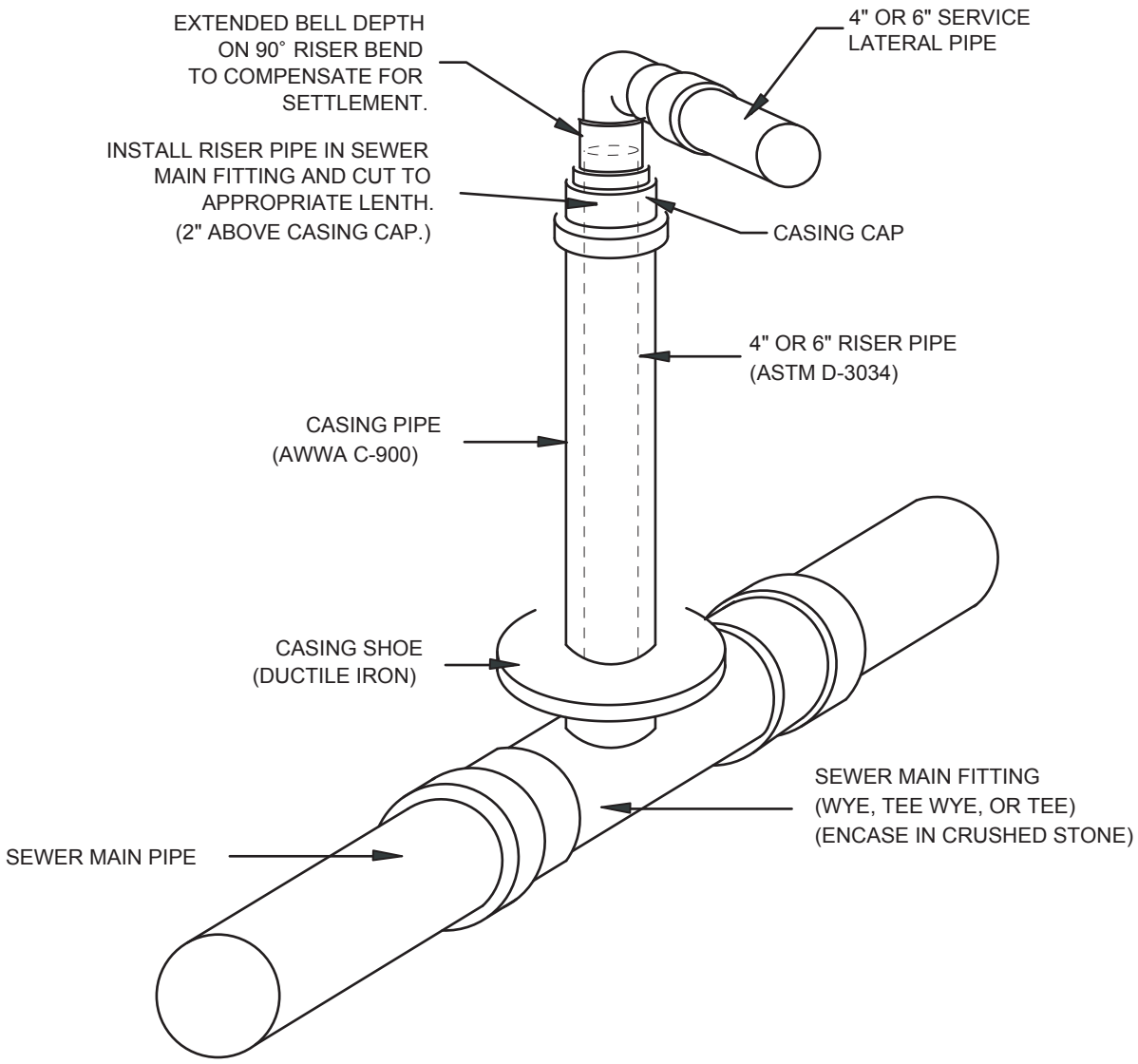

DEEP SEWER ASSEMBLY CONNECTION DETAIL

N.T.S

NOTES:

1) PROVIDE 3/4" CRUSHED STONE (#57) 9" THICK AT SEWER MAIN FITTING.
2) PLACE CASING SHOE OVER SEWER MAIN OUTLET.
3) MAKE SQUARE CUTS ON CASING PIPE - INSTALL IN SHOE AND CUT TO PROPER ELEVATION. (SHORT SEGMENTS WITH COUPLINGS FOR CONVENIENCE IS PERMITTED.) INSTALL CASING CAP.

DATE:	2-28-02
SCALE:	N/A
DRAWN BY:	JMS
CHECKED:	
PROJ:	

New Jersey's Largest Municipality
HAMILTON TOWNSHIP
MUNICIPAL UTILITIES AUTHORITY
ATLANTIC COUNTY

6024 KEN SCULL AVENUE
MAYS LANDING, NJ 08330

HTMUA DRAWING #9

DEEP SEWER CONNECTION DETAIL

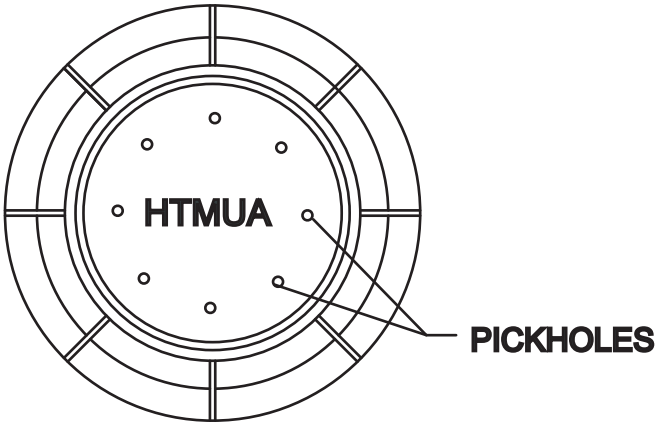

PLAN VIEW

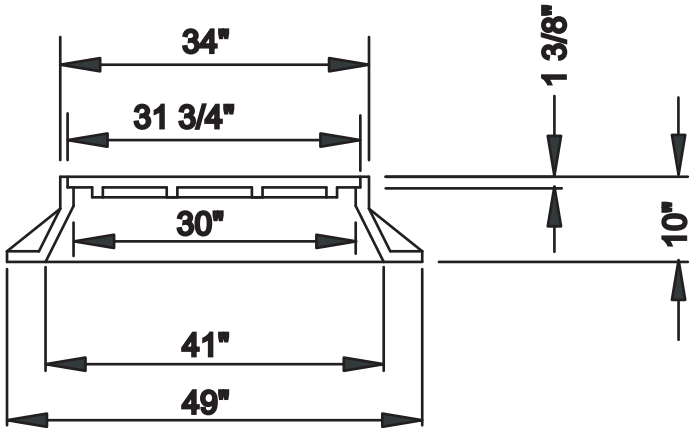

SECTION VIEW

STANDARD MANHOLE FRAME & COVER

NOT TO SCALE

NOTES:

A. COVER SHALL BE SUPPLIED WITH SPECIAL NON-PENETRATING WATERTIGHT PICKHOLES.
B. BEARING SURFACE OR FRAME AND COVER SHALL BE MACHINED.
C. COVER SHALL BE SUPPLIED WITH 1 1/2" HIGH BLOCK LETTERING, RAISED.
D. CAMPBELL FOUNDRY PATTERN NUMBER 1206 OR APPROVED EQUAL.

DATE:	2-28-02
SCALE:	N/A
DRAWN BY:	JMS
CHECKED:	
PROJ:	

New Jersey's Largest Municipality
HAMILTON TOWNSHIP
MUNICIPAL UTILITIES AUTHORITY
ATLANTIC COUNTY

6024 KEN SCULL AVENUE
MAYS LANDING, NJ 08330

HTMUA DRAWING #10

STANDARD MANHOLE FRAME AND COVER

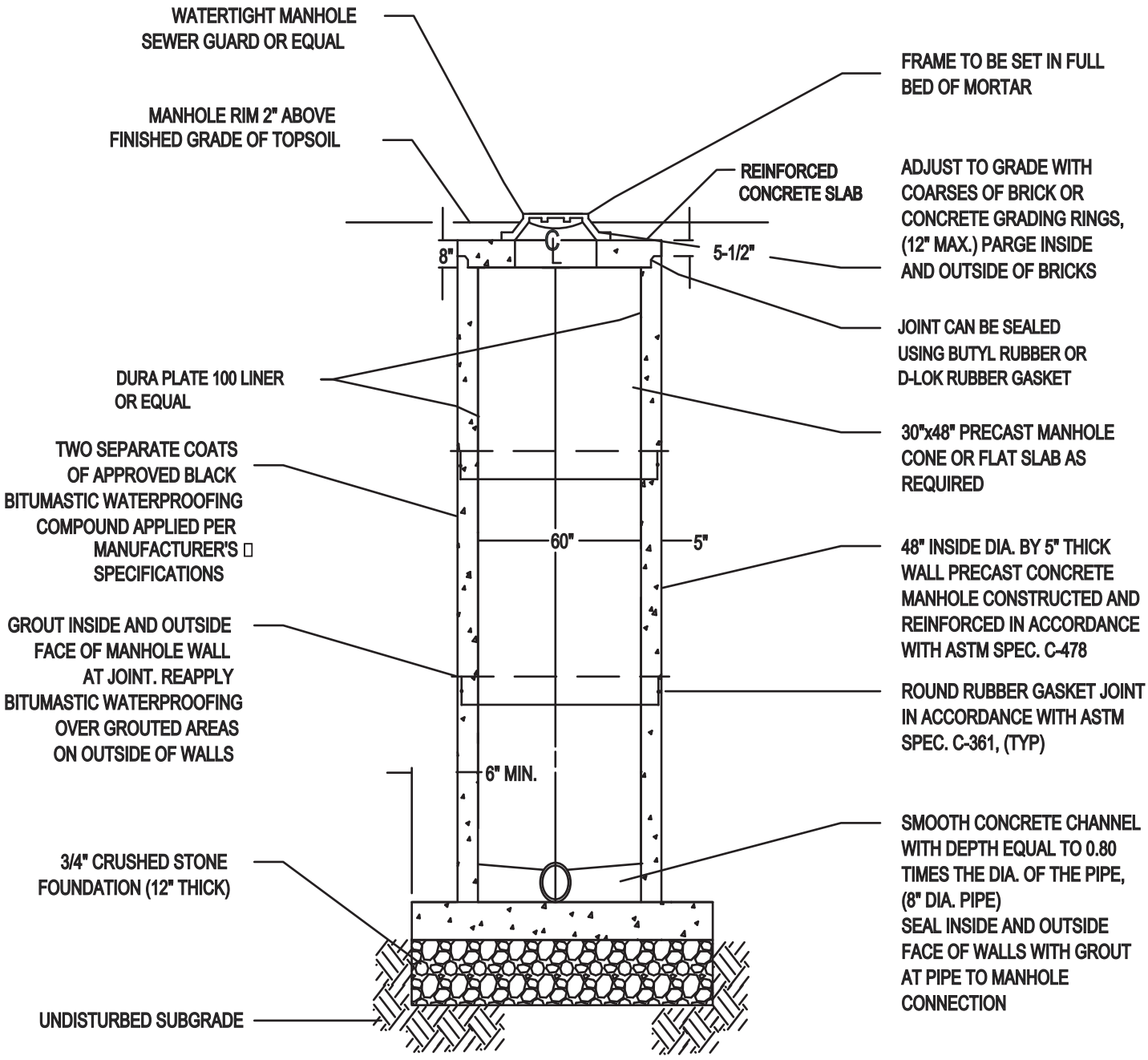

TYPICAL MANHOLE DETAIL - PVC LINED

NO SCALE

DATE:	2-28-02
SCALE:	N/A
DRAWN BY:	JMS
CHECKED:	
PROJ:	

New Jersey's Largest Municipality

HAMILTON TOWNSHIP
MUNICIPAL UTILITIES AUTHORITY
ATLANTIC COUNTY

6024 KEN SCULL AVENUE
MAYS LANDING, NJ 08330

HTMUA DRAWING #11

STANDARD MANHOLE

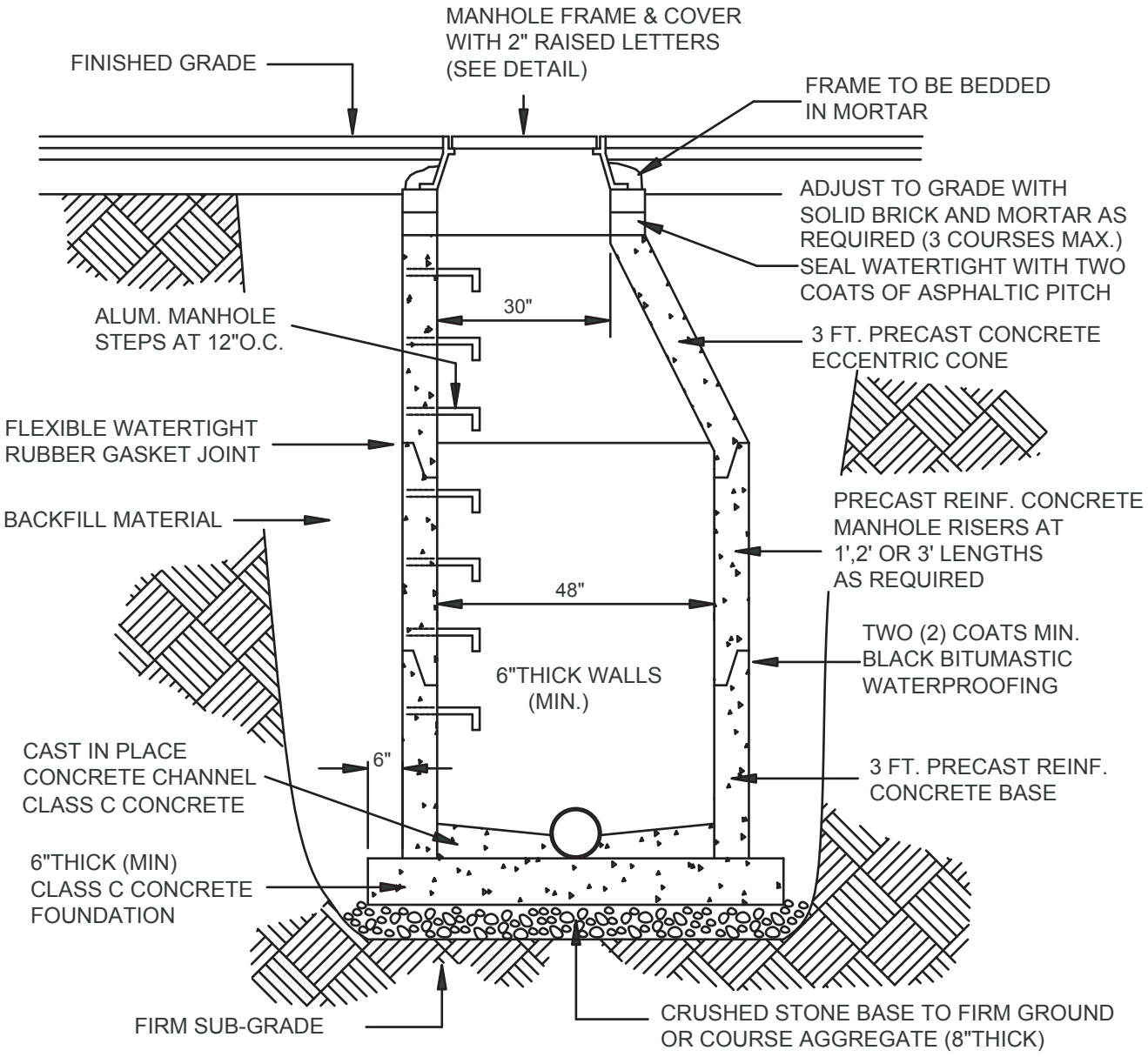

NOTE: THE MANHOLE SHALL CONFIRM
TO ASTM SPECIFICATION C-478

PRECAST CONCRETE MANHOLE DETAIL

(SANITARY SEWER)

NOT TO SCALE

DATE:	2-28-02
SCALE:	N/A
DRAWN BY:	JMS
CHECKED:	
PROJ:	

New Jersey's Largest Municipality

HAMILTON TOWNSHIP
MUNICIPAL UTILITIES AUTHORITY
ATLANTIC COUNTY

6024 KEN SCULL AVENUE
MAYS LANDING, NJ 08330

HTMUA DRAWING #11A

STANDARD MANHOLE

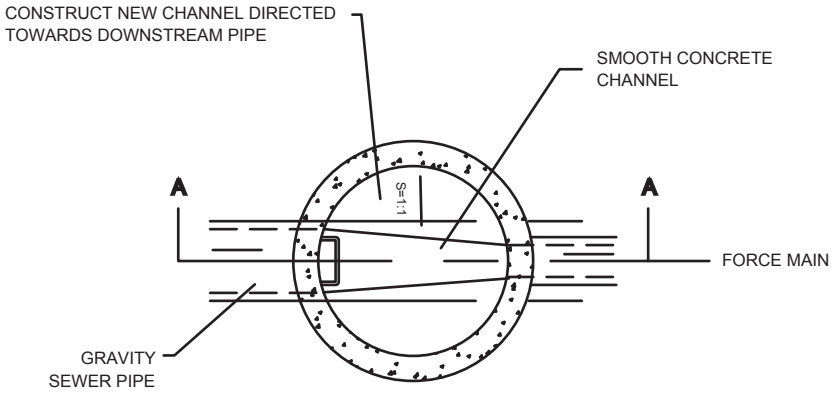

SECTION B - B

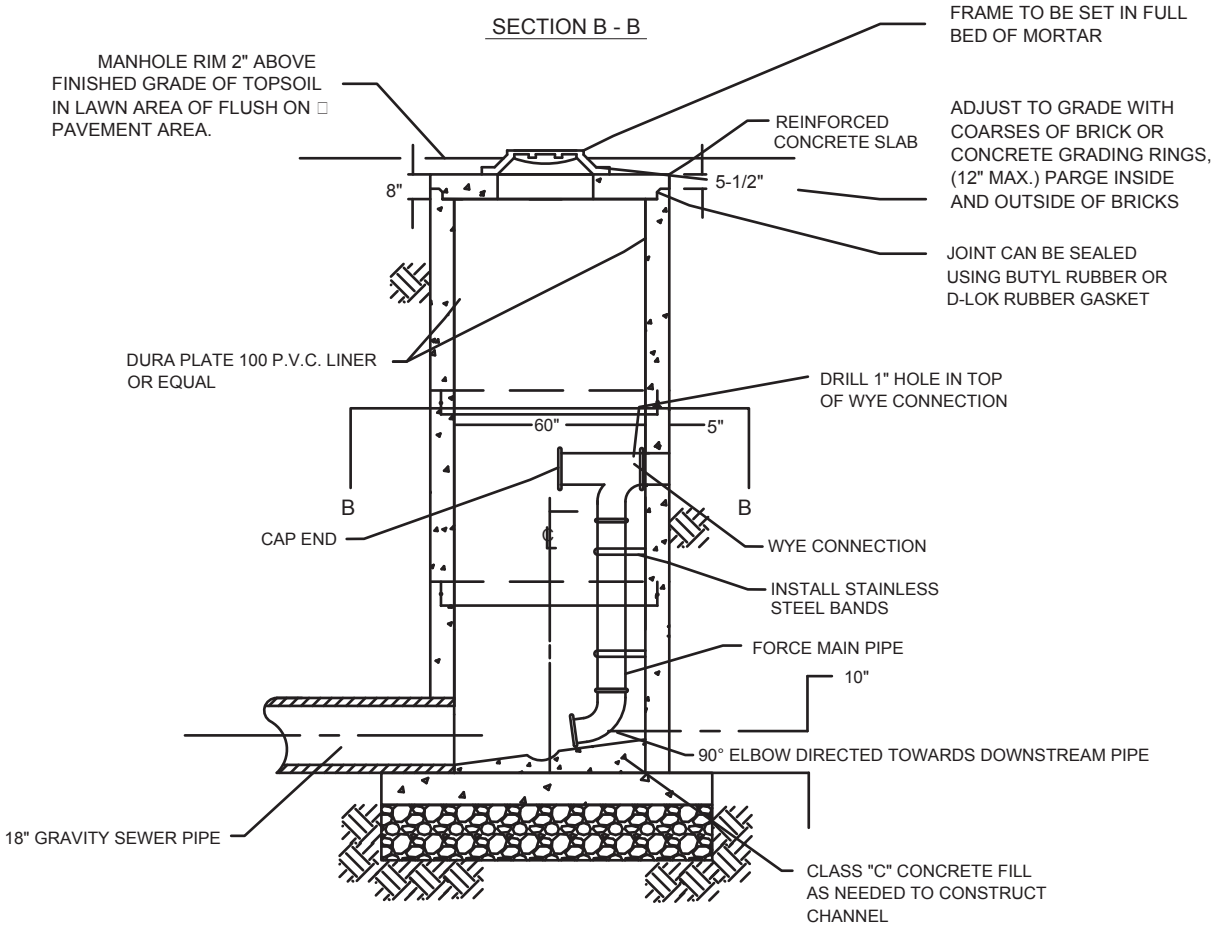

SECTION A - A

PVC LINED FORCE MAIN DISCHARGE MANHOLE

NO SCALE

DATE: 2-28-02
SCALE: N/A
DRAWN BY: JMS
CHECKED:
PROJ:

New Jersey's Largest Municipality
HAMILTON TOWNSHIP
MUNICIPAL UTILITIES AUTHORITY
ATLANTIC COUNTY

6024 KEN SCULL AVENUE
MAYS LANDING, NJ 08330

HTMUA DRAWING #12
STANDARD DROP MANHOLE

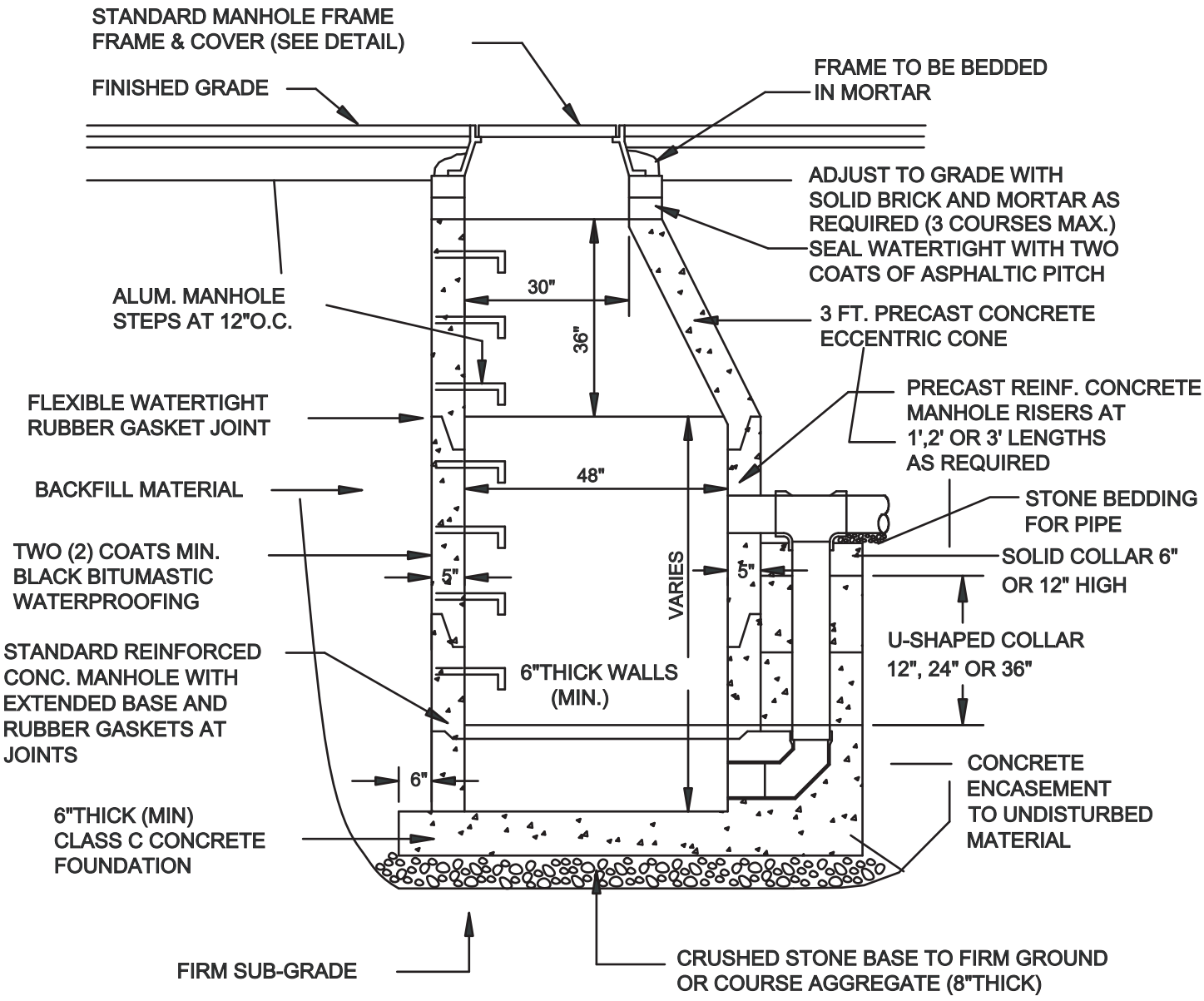

NOTE: THE MANHOLE SHALL CONFIRM
TO ASTM SPECIFICATION C-478

PRECAST CONCRETE DROP MANHOLE DETAIL

(SANITARY SEWER)

NOT TO SCALE

DATE:	2-28-02
SCALE:	N/A
DRAWN BY:	JMS
CHECKED:	
PROJ:	

New Jersey's Largest Municipality

HAMILTON TOWNSHIP
MUNICIPAL UTILITIES AUTHORITY
ATLANTIC COUNTY

6024 KEN SCULL AVENUE
MAYS LANDING, NJ 08330

HTMUA DRAWING #12A

STANDARD DROP MANHOLE

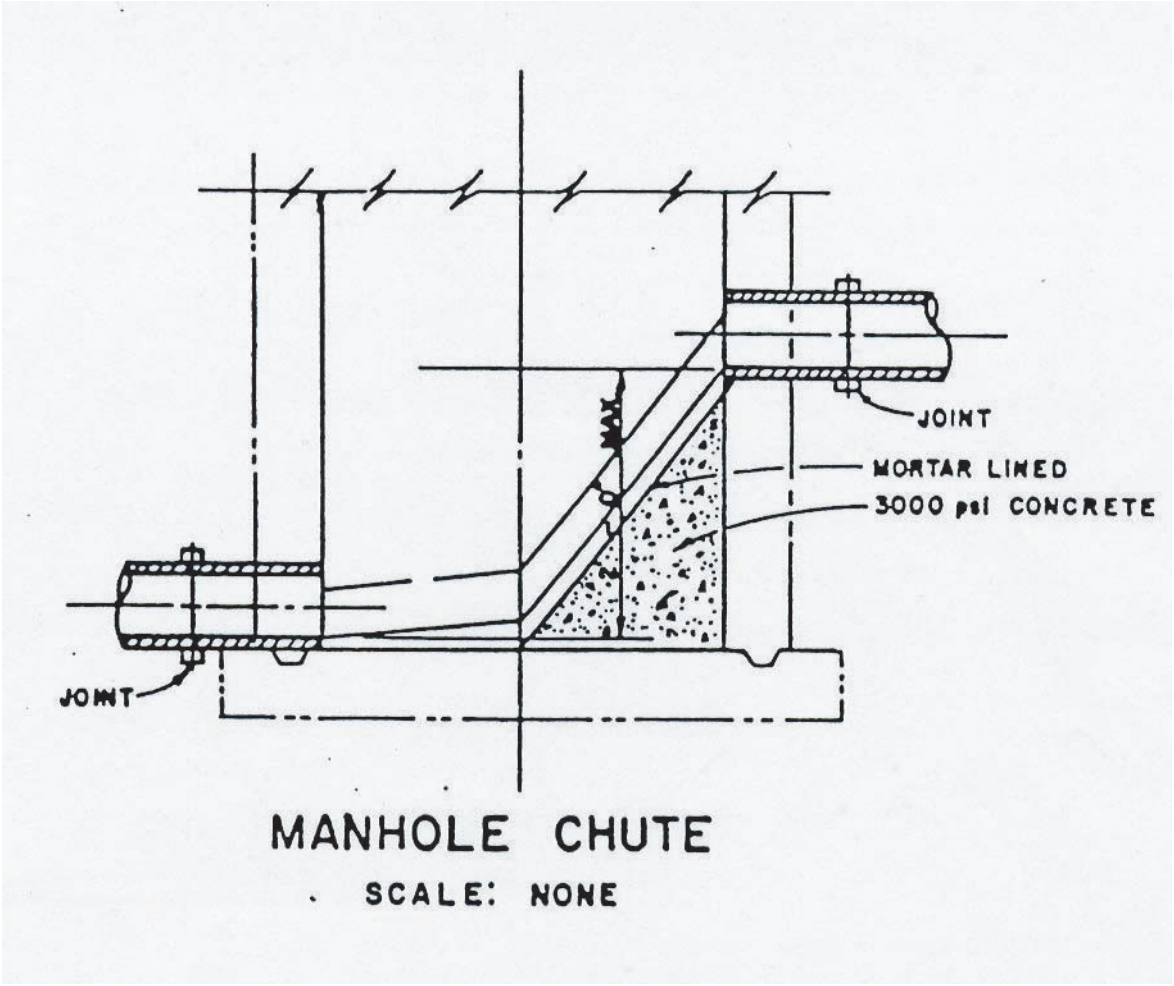

MANHOLE CHUTE

SCALE: NONE

NOTE: MANHOLE CHUTE CONNECTION TO INCLUDE A DURA PLATE 100 P.V.C. LINER

DATE:	2-28-02
SCALE:	N/A
DRAWN BY:	JMS
CHECKED:	
PROJ:	

New Jersey's Largest Municipality
HAMILTON TOWNSHIP
MUNICIPAL UTILITIES AUTHORITY
ATLANTIC COUNTY

6024 KEN SCULL AVENUE
MAYS LANDING, NJ 08330

HTMUA DRAWING #13

MANHOLE CHUTE

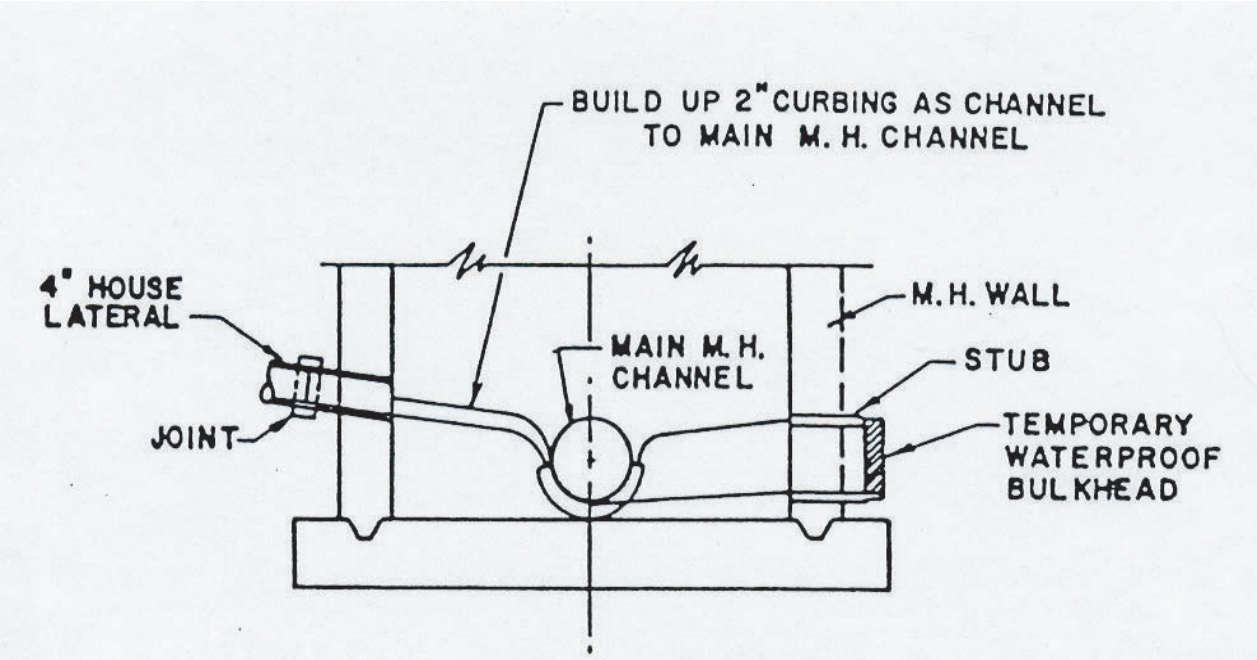

DETAIL OF MANHOLE STUB AND HOUSE LATERAL

SCALE: NONE

DATE:	2-28-02
SCALE:	N/A
DRAWN BY:	JMS
CHECKED:	
PROJ:	

New Jersey's Largest Municipality
HAMILTON TOWNSHIP
MUNICIPAL UTILITIES AUTHORITY
ATLANTIC COUNTY

6024 KEN SCULL AVENUE
MAYS LANDING, NJ 08330

HTMUA DRAWING #14

MANHOLE STUB AND HOUSE LATERAL DETAIL

NOTE:

PORTION EMBEDDED IN MASONRY TO BE COATED WITH COAL TAR PITCH VARNISH OR OTHER SPECIFIED MATERIAL.

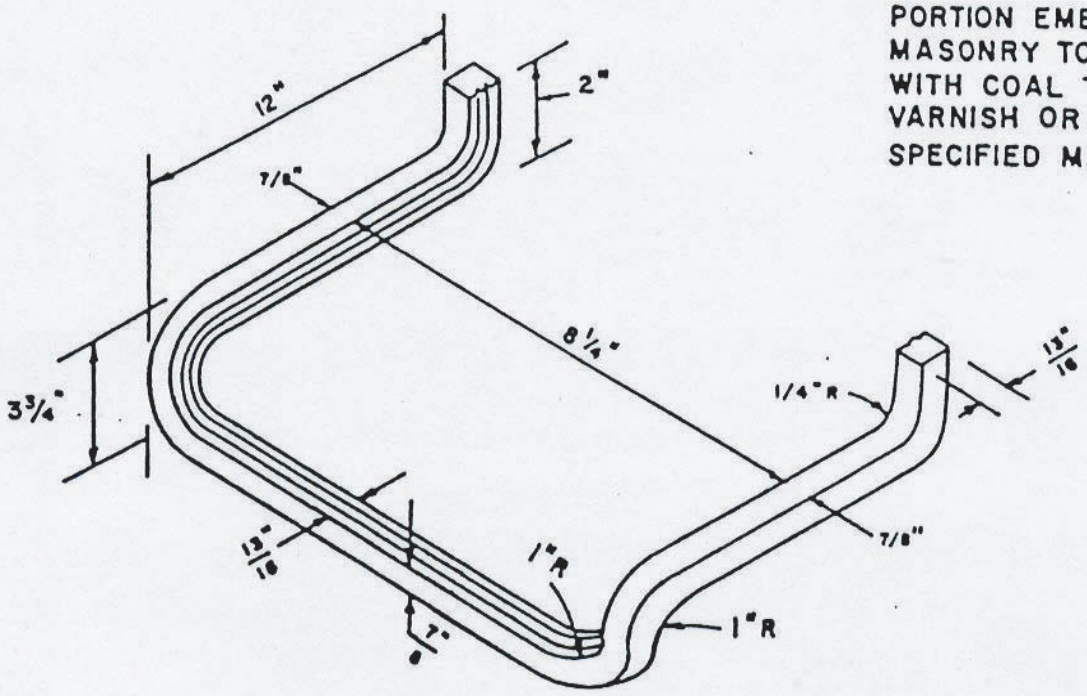

ALUMINUM MANHOLE STEP

SALE: NONE

DATE:	2-28-02
SCALE:	N/A
DRAWN BY:	JMS
CHECKED:	
PROJ:	

New Jersey's Largest Municipality

HAMILTON TOWNSHIP
MUNICIPAL UTILITIES AUTHORITY
ATLANTIC COUNTY

6024 KEN SCULL AVENUE
MAYS LANDING, NJ 08330

HTMUA DRAWING #15

ALUMINUM STEP

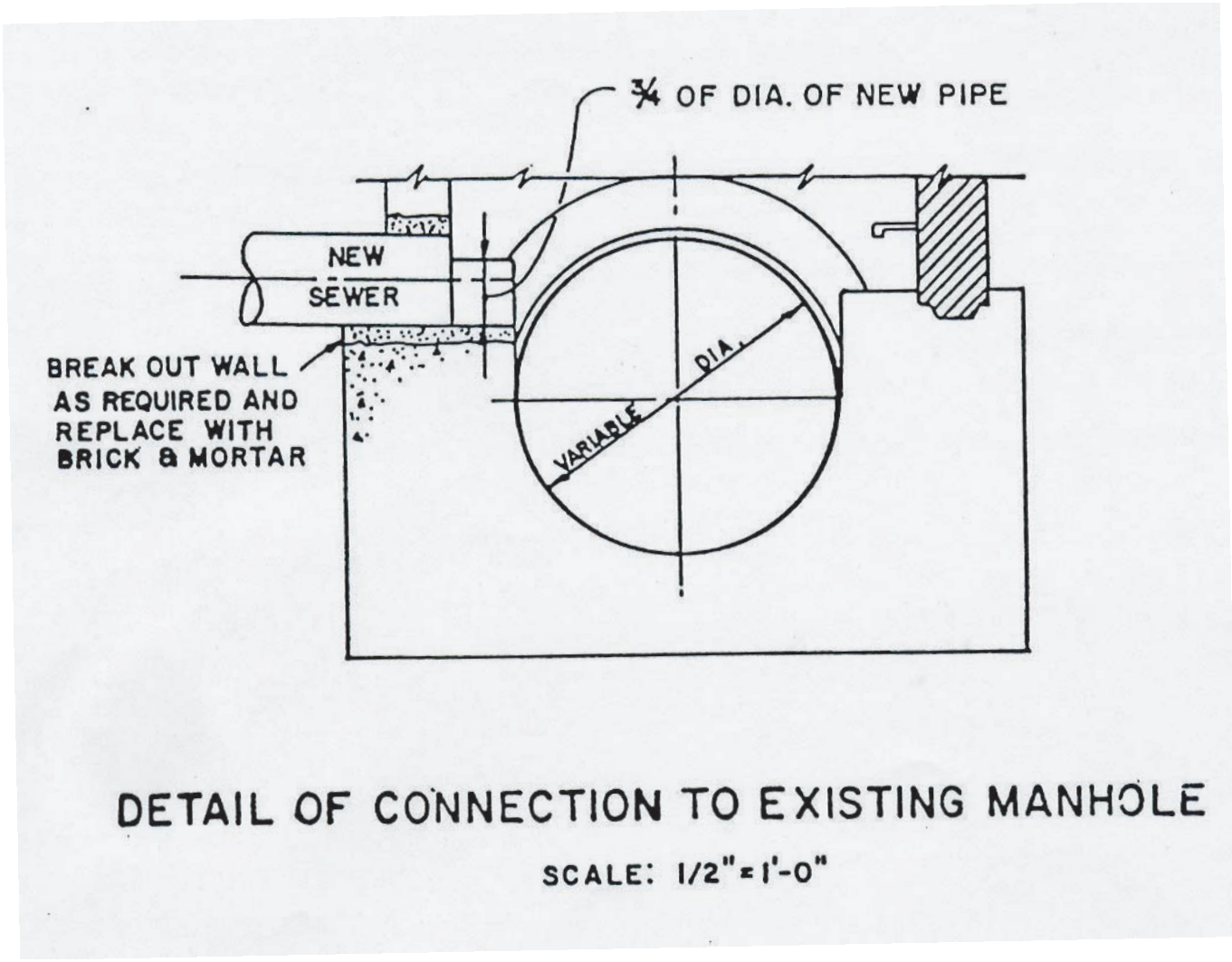

DETAIL OF CONNECTION TO EXISTING MANHOLE

SCALE: 1/2"=1'-0"

DATE:	2-28-02
SCALE:	N/A
DRAWN BY:	JMS
CHECKED:	
PROJ:	

New Jersey's Largest Municipality
HAMILTON TOWNSHIP
MUNICIPAL UTILITIES AUTHORITY
ATLANTIC COUNTY

6024 KEN SCULL AVENUE
MAYS LANDING, NJ 08330

HTMUA DRAWING #16

CONNECTION TO EXISTING MANHOLE

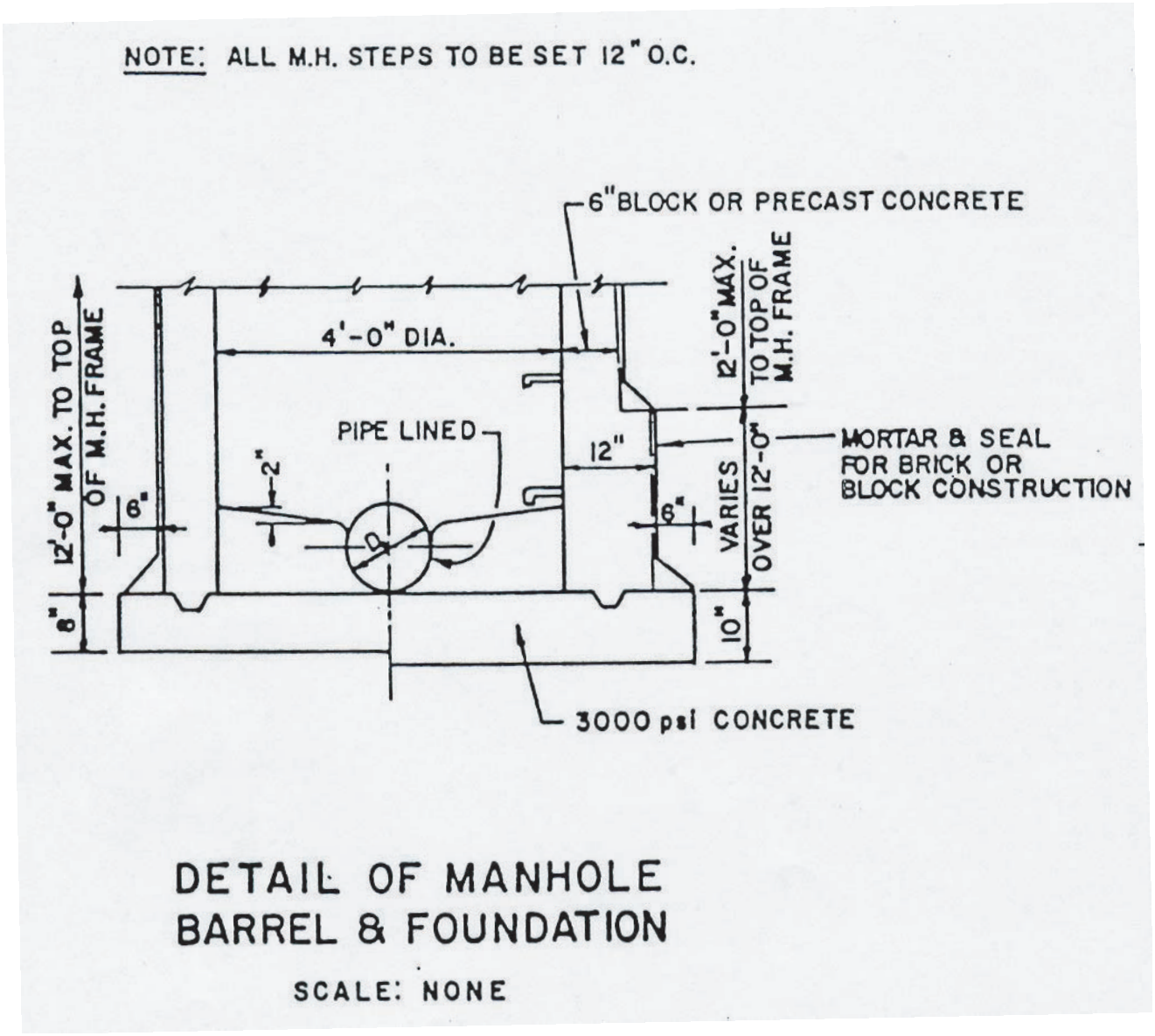

DETAIL OF MANHOLE BARREL & FOUNDATION

SCALE: NONE

DATE:	2-28-02
SCALE:	N/A
DRAWN BY:	JMS
CHECKED:	
PROJ:	

New Jersey's Largest Municipality
HAMILTON TOWNSHIP
MUNICIPAL UTILITIES AUTHORITY
ATLANTIC COUNTY

6024 KEN SCULL AVENUE
MAYS LANDING, NJ 08330

HTMUA DRAWING #17

DETAIL OF MANHOLE BARREL & FOUNDATION